Leica LINO L2P5 / L2P5G

- when it has to be **right**

Leica Geosystems

Overview 2
Technical data 3
Instrument Set-up 4
Operations 7
How to use the smart adapters 9
Message Codes 11
Accuracy Check 12
Care 16
Warranty 17
Safety instructions 18

The Leica Lino L2P5/L2P5G is a self-levelling multifunctional laser. It combines the advantage of a cross-line laser and a point laser in one tool. It is a reliable precision laser for any kind of tasks like levelling, plumbing, transfering and setting out right angles.
It supports you on job side with two crossing vertical and horizontal lines and five points (four points and one intersection point in front of the device) which are arranged precisely in 90° to each other.

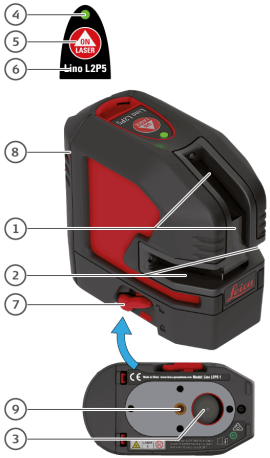

1 Window of vertical line and plumb up point

2 Window of horizontal line and horizontal transfer points

3 Window of plumbing

4 Status LED (on keypad)

5 Laser key (on keypad), ON/OFF

6 Keypad

7 Levelling lock

8 Battery pack

9 Tripod thread 1/4"

There are 2 different types available:

- L2P5 (red laser)
- L2P5G (green laser)

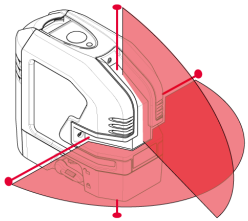

L2P5

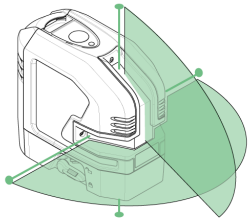

L2P5G

On all images in this document only the red laser version is shown.

Technical data

Description	L2P5	L2P5G
Beam direction/fan angle	Vertical / >170°, Horizontal / >180°	
Point direction	Up, down, right, left, front (90°/180°)	
Range*	25 m (82 ft)	35 m (115 ft)
Range* with receiver	80 m (262 ft)	
Levelling accuracy	±0.2 mm/m = ±2.0 mm @ 10m (±0.002 in/ft = ±0.08 in @ 33ft)	
Horizontal/Vertical line accuracy	±0.3 mm/m (±0.004 in/ft)	
Point accuracy	±0.2 mm/m (±0.002 in/ft)	
Self-levelling range	± 4 °	
Self-levelling time	< 3 s	
Out-of-level warning	Yes - blink lines every 5 s	
Levelling system	Automatic pendulum lockable	
Laser type	635 ± 5 nm, Class 2 (acc. IEC 60825-1)	525 ± 5 nm, Class 2 (acc. IEC 60825-1)
Protection class	IP 54 (IEC 60529) dust and splash water	
Drop resistant	6 x 0.5 m (1.64 ft)	
Battery type	Lino Li-Ion battery pack 5200 mAh / 18.7 Wh (3 alkaline AA)	
Operating time with Li-Ion battery	26h (2 beam + 4 point) - 44h (1 beam + 2 point) continuous	15h (2 beam + 4 point) - 28h (1 beam+ 2 point) continuous
Operating time with alkaline batteries	8h (2 beam + 4 point) - 13h (1 beam + 2 point) continuous	4h (2 beam + 4 point) - 7h (1 beam+ 2 point) continuous
Automatic shut-off	Available	
Dimensions (L x W x H)	110 x 60 x 100 mm (4.33 x 2.36 x 3.93 in)	
Weight with Li-Ion battery	530 g (1.17 lbs)	
Operating temperature	-10…+50 °C (+14…+122 °F)	
Storage temperature	-25…+70 °C (-13…+158 °F)	
Laser line width at 5m distance	< 2 mm (<0.08 in)	
Tripod thread	1/4” (+ 5/8” with adapter)	
Pulse power for receiver	Yes, auto	

* depending on lighting conditions

Introduction

The safety instructions (see Safety Instructions) and the user manual should be read through carefully before the product is used for the first time.

The person responsible for the product must ensure that all users understand these directions and adhere to them.

The symbols used have the following meanings:

WARNING

Indicates a potentially hazardous situation or an unintended use which, if not avoided, will result in death or serious injury.

CAUTION

Indicates a potentially hazardous situation or an unintended use which, if not avoided, may result in minor injury and/or appreciable material, financial and environmental damage.

Important paragraphs which must be adhered to in practice as they enable the product to be used in a technically correct and efficient manner.

Levelling lock

Levelling unlocked

In the unlocked position the instrument automatically levels itself within the specified inclination range. (See Technical data)

Levelling locked

Turn the levelling lock in order to transport or tilt the instrument beyond the self-levelling range. When locked, the pendulum is fixed and the self-levelling function is deactivated. In this case the laser blinks every 5sec.

Laser receiver

To be able to detect the laser lines over long distances or in unfavourable lighting conditions, a laser receiver can be used.

We recommend the Leica RGR200 laser receiver.

The Lino is powered by XRANGE technology and therefore automatically detected by the receiver.

Li-Ion battery

Charge Li-Ion battery

Charge the Li-Ion battery before using it for the first time. While charging, the instrument may heat up. This is normal and should not affect the instrument´s lifespan or performance. At the recommended storage temperature of -20°C to +30°C (-4°F to +86°F), batteries containing a 50% to 100% charge can be stored up to 1 year. After this storage period the batteries must be recharged.

CAUTION

Connecting the charger using the wrong adapter may cause serious damage to the instrument. Any damage caused by misuse is not covered by warranty. Use only Leica-approved chargers, batteries and cables. Unapproved chargers or cables can cause the battery to explode or damage the instrument.

Insert Li-Ion battery

Insert the battery-pack by pressing it down and then tilting it towards the housing as shown until it snaps in.

Li-Ion status LED

lights green: charging battery

OFF: charging finished / no charging

Alkaline batteries

To ensure a reliable use, we recommend using high quality Alkaline batteries.

Insert Alkaline batteries

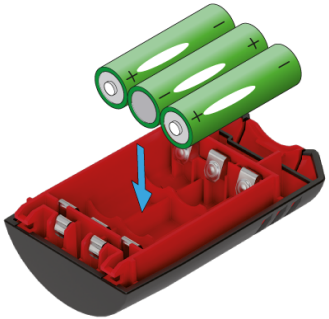

Insert Alkaline batteries in the battery-pack.

Insert the battery-pack

Insert the battery-pack by pressing it down and then tilting it towards the housing as shown until it snaps in.

Switching ON/OFF

Auto power-off
Place the lock switch to the unlocked position (see Levelling lock). To activate auto power-off after 30 min operation press and hold the On button at start for 5 sec. The status LED blinks 3 times in green colour. To deactivate it again repeat the described steps until the status LED blinks 3 times in red colour.

Functions

Check if self-levelling is required and correspondingly activated. (See Levelling lock for details)

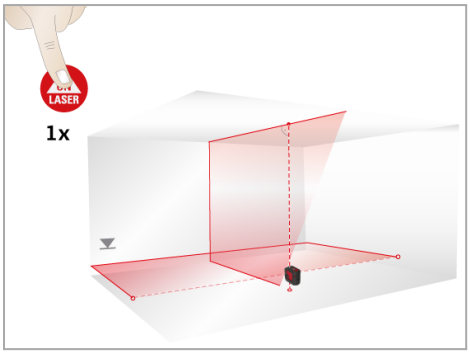

Vertical lines and dots / horizontal lines and dots on

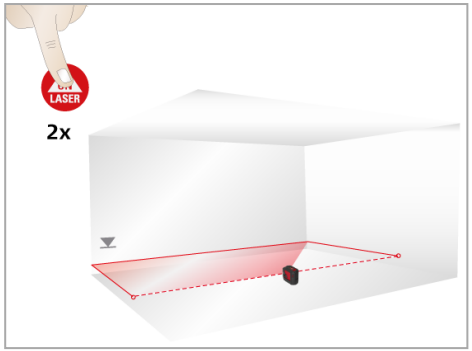

Horizontal line and dots on

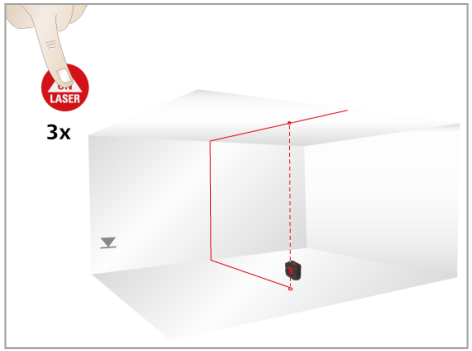

Vertical line and dots on

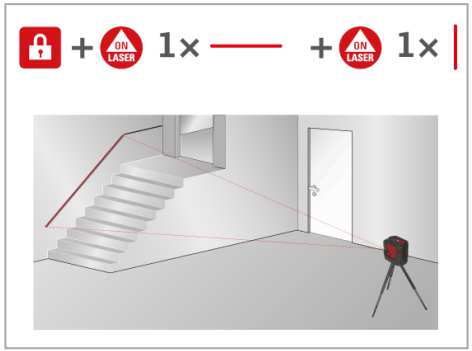

Setup device to adapter

Snap the device on the Twist 360 adapter.

Alignment of vertical laser lines

Turn the device 360° around the plumb point to adjust the vertical line.

Alignment of horizontal laser lines

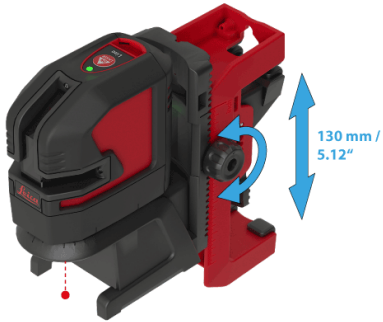

Turn the adjustment knob of UAL130 to fine adjust the horizonal line to the desired reference level.

Different fixing applications

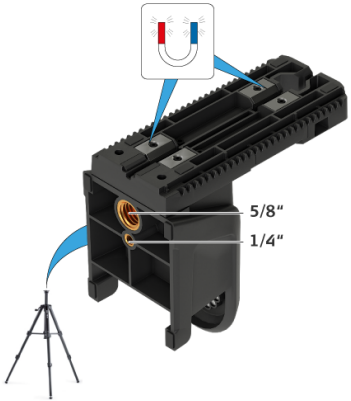

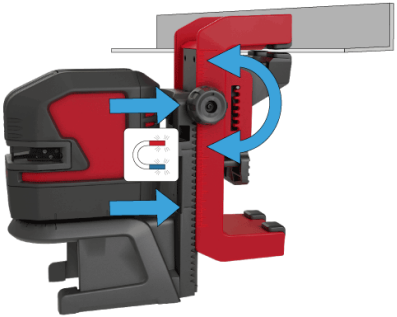

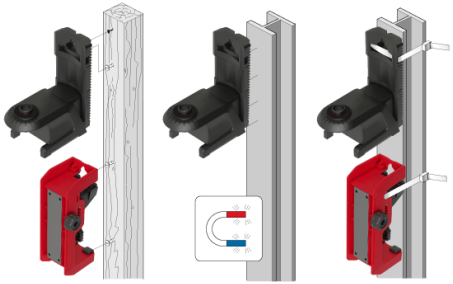

Laser	LED	Cause	Correction
ON/OFF	lights red	Instrument has low power	Charge Li-Ion battery or change Alkaline batteries
OFF	blinks red	Temperature alert	Cool down or heat up instrument
blinks	blinks red	Instrument is out of self-levelling range	Place the instrument almost horizontal and self-levelling will start automatically
blinks	lights red	Instrument is out of self-levelling range and has low power	Charge Li-Ion battery or change Alkaline batteries
blinks every 5 sec	lights red	Levelling lock is activated but instrument has low power	Charge Li-Ion battery or change Alkaline batteries
blinks every 5 sec	blinks green	Levelling lock is activated for working without self-levelling	

Check the accuracy of your Leica Lino regularly and particularly before important measuring tasks. Check Levelling lock before checking the accuracy.

Levelling

Checking the accuracy of the levelling

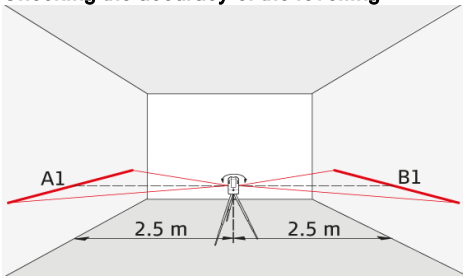

Set the instrument on a tripod half-way between two walls (A+B) that are approx. 5 m apart. Place the lock switch in the "Unlocked" position (see Levelling lock). Direct the instrument at wall A and switch on the instrument. Activate the horizontal laser line or laser point and mark the position of the line or the point on wall (A1). Rotate the instrument by 180° and mark the horizontal laser line or the laser point in exactly the same way on wall (B1).

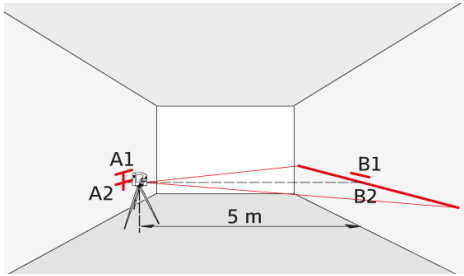

Then place the instrument at the same elevation as close as possible to wall A and again mark the horizontal laser line or the laser point on wall A (A2). Rotate the instrument by 180° again and mark the laser on wall B (B2). Measure the distances of the marked points A1-A2 and B1-B2. Calculate the difference of the two measurements.

|(A1 - A2) - (B1 - B2)| <=2 mm

If the difference does not exceed 2 mm, then the Leica Lino is within tolerance.

Should your Leica Lino be outside of the specified tolerance, please contact a local dealer or an authorised Leica Geosystems distributor.

Vertical and horizontal line

Checking the accuracy of the horizontal line

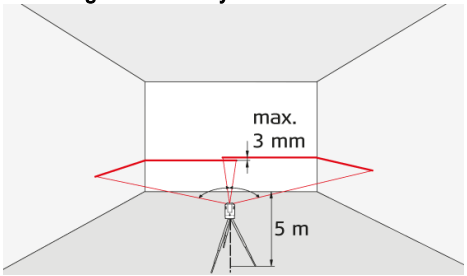

Place the lock switch in the "Unlocked" position (see Levelling lock). Position the instrument approx. 5 m away from the wall. Direct the instrument at the wall and switch on. Activate the laser line and mark the intersection point of laser crosshairs on the wall. Swivel the instrument to the right and then to the left. Observe the vertical deviation of the horizontal line from the marking. If the difference does not exceed 3 mm, then the Leica Lino is within tolerance.

Checking the accuracy of the vertical line

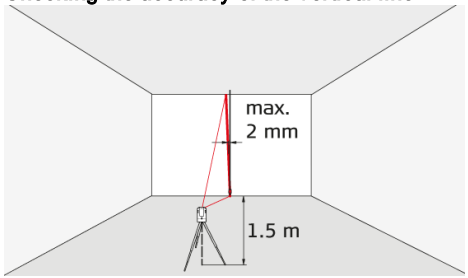

Place the lock switch in the "Unlocked" position (see Levelling lock). As a reference, use a plumb-bob and attach it as close as possible to an approx. 3 m high wall. Position the instrument at a distance of approx. 1.5 m from the wall at an elevation of approx. 1.5 m. Direct the instrument at the wall and switch on. Rotate the instrument and align it with the bottom of the plumb line. Now read off the maximum deviation of the laser line from the top of the plumb line. If the difference does not exceed 2 mm, then the Leica Lino is within tolerance.

Should your Leica Lino be outside of the specified tolerance, please contact a local dealer or an authorised Leica Geosystems distributor.

Vertical plumb points

Checking the accuracy of the upper plumb point:

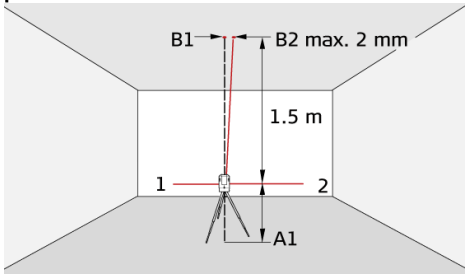

Place the lock switch in the "Unlocked" position (see Levelling lock). Set up the laser on its tripod to wall mount bracket near point A1 at a minimum distance of 1.5 m from point B1. The horizontal laser is aligned in direction 1. Mark the laser points A1 and B1 with a pin.

Checking the accuracy of the lower plumb point:

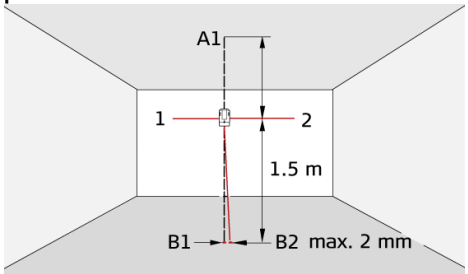

Rotate the instrument by 180° so that it points in the opposite direction 2 to direction 1. Adjust the instrument so that the laser beam hits point A1 exactly. If point B2 is no further than 2 mm away from point B1, then the Leica Lino is within tolerance.

Should your Leica Lino be outside of the specified tolerance, please contact a local dealer or an authorised Leica Geosystems distributor.

Perpendicularity horizontal points

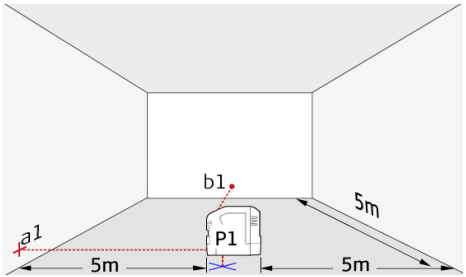

Place lock switch in "Unlocked" position (see Levelling lock). Mark a reference point (P1) approx. 5m from the walls and position the lower plumb point exactly on it. Align the cross hair to the left wall and mark the intersection point (a1) approx. on the same hight like P1 to the wall. Shortly after mark the right-hand perpendicular beam (b1) on the front wall.

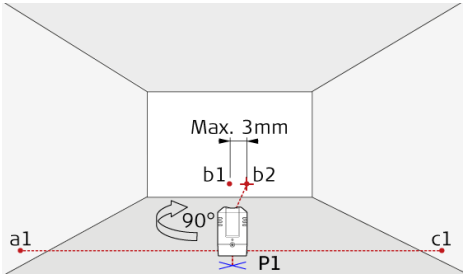

Then rotate the device exactly 90° clockwise around the plumb point P1 and position the left-hand perpendicular beam to the existing reference point a1. Make sure that the upper plumb point is still exactly on the reference P1. Check afterwards the new reference point b2 with the old reference b1 on the front wall. The deviation between the two points may be max. 3mm. Mark the new position of the right-hand perpendicular beam to the right wall with c1.

Should your Leica Lino be outside of the specified tolerance, please contact a local dealer or an authorised Leica Geosystems distributor.

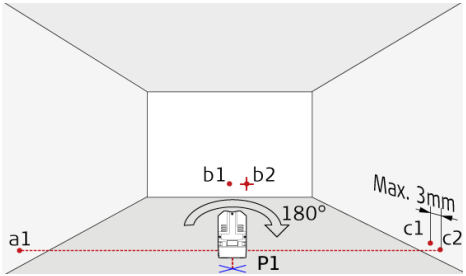

Afterwards turn the device exactly 180° around the plumb point P1 and position the right-hand perpendicular beam to the existing reference point a1. Make sure that the upper plumb point is still exactly on the reference P1. Then mark the left-hand beam to the right wall and mark it with c2. Finally measure the difference between the former reference point c1 and the new point c2. The deviation may be max. 3mm between these two points.

Should your Leica Lino be outside of the specified tolerance, please contact a local dealer or an authorised Leica Geosystems distributor.

Never immerse the device in water. Wipe off dirt with a damp soft cloth. Never use aggressive cleaning agents or solvents. Treat the instrument with the same care that you would apply to binoculars or a camera. Dropping or violent shaking of the instrument may damage it. Check the instrument for any damage before using it. Check the levelling accuracy of the instrument regularly.

To warranty the best precision and visibility please clean the optics of your device regularly. Therefore blow off the dust from the glasses without touching the optics with your fingers. If necessary use a damp soft cloth and a little bit of pure alcohol.

To avoid wrong measurements also clean your adapters regularly. This could be done also by the proposed recommendation. Especially the interface between the adapter and device should always be clean to enable easy rotation. To clean the magnetic surface you could use compressed air or modelling clay.

If the equipment get wet always dry it (max. 70°C/158°F) before repacking it into the case.

International Limited Warranty

The Leica Lino comes with a two year warranty from Leica Geosystems AG. To receive an additional year warranty, the product **must be registered** on our website at http://myworld.leica-geosystems.com **within eight weeks** of the purchase date. If the product is not registered, our two year warranty applies.

More detailed information about the International Limited Warranty can be found on the internet at: www.leica-geo-systems.com/internationalwarranty.

Calibration and repair service

Leica Geosystems recommend to check the device within regular intervals to prove the function and reliability in accordance with standards and requirements. At least one time per year.

In case of damaging your product please never attemp to repair the device yourself.

For calibration or repair service please visit your local dealer or any certified Leica Geosystems distributor.

The person responsible for the instrument must ensure that all users understand these directions and adhere to them.

Areas of responsibility

Responsibilities of the manufacturer of the original equipment:

Leica Geosystems AG
Heinrich-Wild-Strasse
CH-9435 Heerbrugg
Internet: www.leica-geosystems.com

The company above is responsible for supplying the product, including the User Manual in a completely safe condition.

The company above is not responsible for third party accessories.

Responsibilities of the person in charge of the instrument:

1. To understand the safety instructions on the product and the instructions in the User Manual.
2. To be familiar with local safety regulations relating to accident prevention.
3. Always prevent access to the product by unauthorised personnel.

Permitted use

1. Projection of horizontal and vertical laser lines and laser points

Prohibited use

1. Using the product without instruction
2. Using outside the stated limits
3. Deactivation of safety systems and removal of explanatory and hazard labels
4. Opening of the equipment by using tools (screwdrivers, etc.)
5. Carrying out modification or conversion of the product
6. Deliberate dazzling of third parties; also in the dark
7. Inadequate safeguards at the surveying site (e.g. when measuring on roads, construction sites, etc.)

Hazards in use

⚠ WARNING

Watch out for erroneous measurements if the instrument is defective or if it has been dropped or has been misused or modified. Carry out periodic test measurements. Particularly after the instrument has been subject to abnormal use, and before, during and after important measurements.

⚠ CAUTION

Never attempt to repair the product yourself. In case of damage, contact a local dealer.

⚠ WARNING

Changes or modifications not expressively approved by Leica Geosystems/manufacturer for compliance could void the user´s authority to operate the equipment.

⚠ WARNING

Laser/adapters should not be used in the vicinity of pacemaker because of integrated magnets which can affect the function of the pacemaker.

Limits of use

Refer to section Technical data. The instrument is designed for use in areas permanently habitable for humans. Do not use the product in explosion hazardous areas or in aggressive environments.

Disposal

⚠ CAUTION

Flat batteries must not be disposed of with household waste. Care for the environment and take them to the collection points provided in accordance with national or local regulations.

The product must not be disposed with household waste. Dispose of the product appropriately in accordance with the national regulations in force in your country. Adhere to the national and country specific regulations.

Product specific treatment and waste management can be downloaded from our homepage.

Transport

Transport of instrument

Always set the device in "Locked" position by turning the lock switch when transporting the device (see Levelling lock). Please use the original case or an equivalent packaging for transporting and shipping your measuring device.

Transport of Li-Ion battery

⚠ WARNING

During transport, shipping or disposal of batteries it is possible for inappropriate mechanical influences to constitute a fire hazard.

Precautions:

Before shipping the product or disposing it, discharge the batteries by running the product until they are flat. When transporting or shipping batteries, the person in charge of the product must ensure that the applicable national and international rules are observed. Before transportation or shipping, contact your local passenger or freight transport company.

⚠ WARNING

High mechanical stress, high ambient temperatures or immersion into fluids can cause leakage, fire or explosion of the batteries.

Precautions:

Protect the batteries from mechanical influences and high ambient temperatures. Do not drop or immerse batteries into fluids.

For further information about charging please refer to Li-Ion battery.

Electromagnetic Compatibility (EMC)

⚠ WARNING

The device conforms to the most stringent requirements of the relevant standards and regulations. However, the possibility of causing interference in other devices cannot be totally excluded.

FCC statement (applicable in U.S.)

This equipment has been tested and found to comply with the limits for a Class B digital instrument, pursuant to part 15 of the FCC rules. These limits are designed to provide reasonable protection against harmful interference in a residential installation. This equipment generates, uses and can radiate radio frequency energy and, if not installed and used in accordance with the instructions, may cause harmful interference to radio communications.

However, there is no guarantee that interference will not occur in a particular installation. If this equipment does cause harmful interference to radio or television reception, which can be determined by turning the equipment off and on, the user is encouraged to try to correct the interference by one or more of the following measures:

1. Reorient or relocate the receiving antenna
2. Increase the separation between the equipment and the receiver
3. Connect the equipment into an outlet on a circuit different from that to which the receiver is connected
4. Consult the dealer or an experienced radio/TV technician for help

This instrument complies with part 15 of the FCC rules. Operation is subjected to the following two conditions:

1. This instrument may not cause harmful interference, and
2. this instrument must accept any interference received, including interference that may cause undesired operation.

ISED statement (applicable in Canada)

This instrument complies with Industry Canada license-exempt RSS standard(s). Operation is subjected to the following two conditions:

1. This instrument may not cause harmful interference, and
2. this instrument must accept any interference received, including interference that may cause undesired operation.

Laser classification

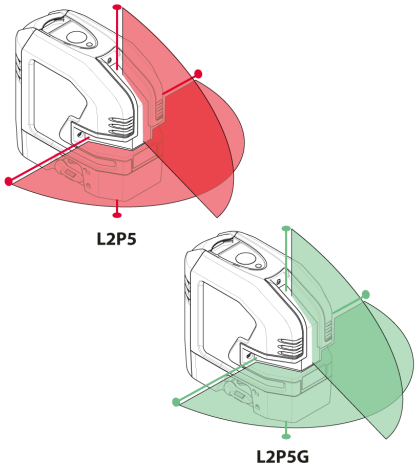

The instrument produces visible laser beams, which are emitted from the instrument. It is a Class 2 laser product in accordance with:

- IEC60825-1 : 2014 „Radiation safety of laser products“

Laser Class 2 products

Do not stare into the laser beam or direct it towards other people unnecessarily. Eye protection is normally afforded by aversion responses including the blink reflex.

⚠ WARNING

Looking directly into the beam with optical aids (e.g. binoculars, telescopes) can be hazardous.

⚠ CAUTION

Looking into the laser beam may be hazardous to the eyes.

Wavelength
L2P5: 635 +/- 5 nm (red) / L2P5G: 525 +/- 5 nm (green)
Maximum radiant output power for classification
<1 mW
Pulse duration
70 µs, cw (red) / 50 - 70 µs (green)
Pulse repetition frequency
10 kHz
Beam divergence line
< 200°
Beam divergence point
< 1.5 mrad

Labelling

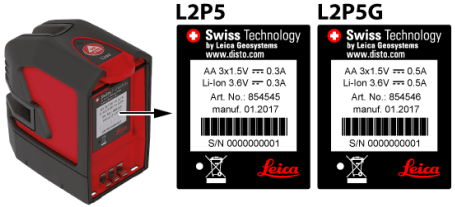

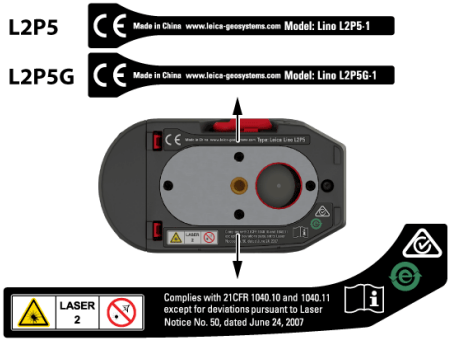

Subject to change (drawings, descriptions and technical data) without prior notice.