ELLIOTT DATA SYSTEMS, INC.

Fusion Workstation

KNAPE & VOGT

INTELLIGENTLY DESIGNED

- Actuator handle, allows for effortless adjustments, optimizing workflow efficiencies while sitting or standing
- OSHPD approved, ensuring installations meet local building codes and infrastructure requirements
- Auto retracting keyboard mechanism ensures workstation remains in compact storage position when not in use

INSTALLS IN MINUTES

- Ships pre-assembled resulting in minimal after sale installation costs and reduced "down time" for critical care areas
- Complete mounting hardware is supplied resulting in seamless integration into multiple mounting surfaces
- Quick connect Vesa adapter allows for single person integrations and portrait to landscape preferences

BUILT FOR LIFE

- Designed for long term dependability, within varying EMR implementations and adaptations, maximizing return on investment
- Maintains high infection control standards with durable anti-microbial agents incorporated into all contact surfaces
- Manufactured of steel, aluminum and high density polyethylene materials supporting high performance long-term usage

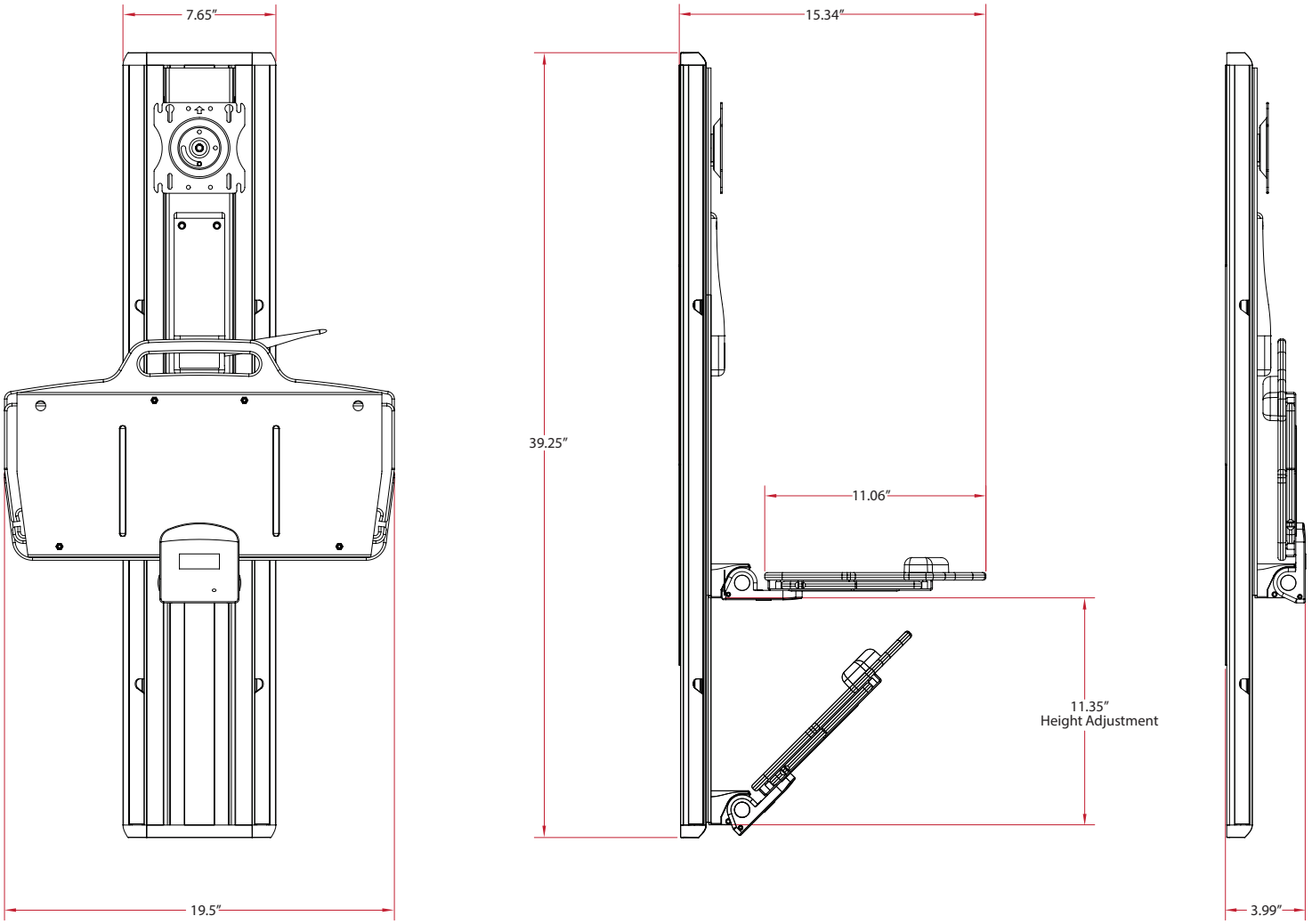

OPA Number - 2937.10

Fusion™ Workstation

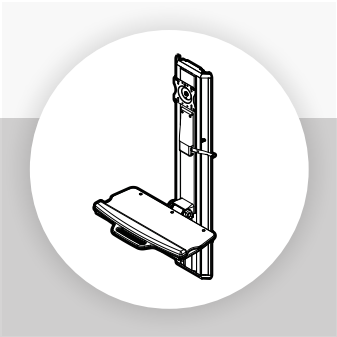

Finish: Silver

FusionSeries

LCD Height Adjustment	Maximum Load Capacity	LCD Rotation	LCD Pivot	LCD Tilt Range	Mounting Standard
11.35″	20 lbs.	90°	0°	0°	VESA 75mm/100mm

Notes: 1. Weight = packaged shipping weight per unit. 2. Specifications are subject to change without notice. Shipping Weight: 33 lbs. Box Dimensions: 42" x 21" x 5"

KNAPE & VOGT

ELLIOTT DATA SYSTEMS, INC.

Contact Elliott for more information
1-888-345-8511
healthcare.elliottdata.com