THE GARAGE FORMWORK SYSTEM BY ETOBICOKE IRONWORKS

The PT Garage System's formwork is engineered to meet the most demanding specifications of your project. The System is built new to suit the specifications of each project.
Etobicoke Formwork Systems are job proven to give the best economic utilization of man and materials.
Our systems will further enhance and minimize cost on any efficient structural building design.

EIW *TOTAL* PARKING FORMWORK SYSTEMS

Products and Services

Access Scaffolding Systems

- TSS Total Scaffold System (Steel/Aluminum)
- TSF Total System Frame (Aluminum)
- Traditional Frame Scaffolding

Shoring Systems

- Truss Shoring System (Steel/Aluminum)
- QSS Quick Strip System (Aluminum)
- HD Frame Shoring (Steel/Aluminum)
- Post Shores (Steel/Aluminum)

Forming System

- Panel Forming System (Steel/Aluminum)
- Mega Form Panel Forming System (Aluminum)
- Gang Forming System (Aluminum)
- Aluminum Beams
- Aluminum Strong Backs

Technical Services

- Project Analysis
- Technical Training
- On Site Technical Support
- Custom Design

Etobicoke Ironworks Limited

141 Rivalda Road Weston Ontario M9M 2M6
Tel: (416) 742-7111 Fax: (416) 742-2737
email: info@eiw-ca.com www.eiw-ca.com

COMPONENTS OF EIW TOTAL PARKING FORMWORK

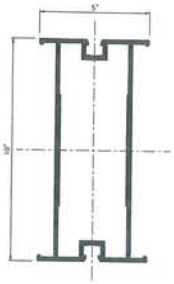

10î Stringer Beam

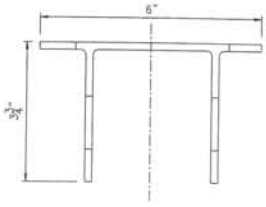

Hinge Bracket

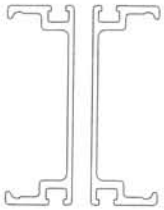

7 □î Ledger

Wood - I

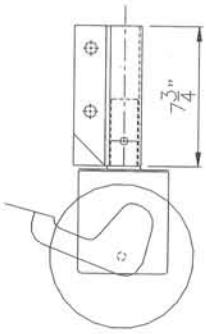

8î Caster

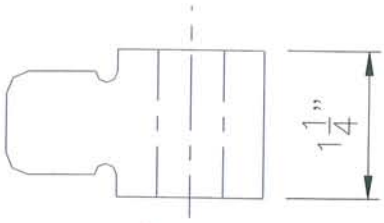

Packing Clip

SPRING CLAMP
w/T-BOLT&NUT

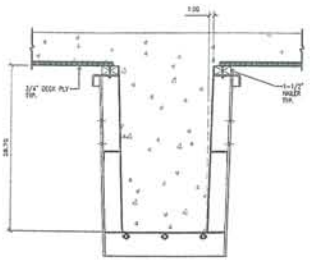

Steel Beam Form

20K LEG AL. FRAME

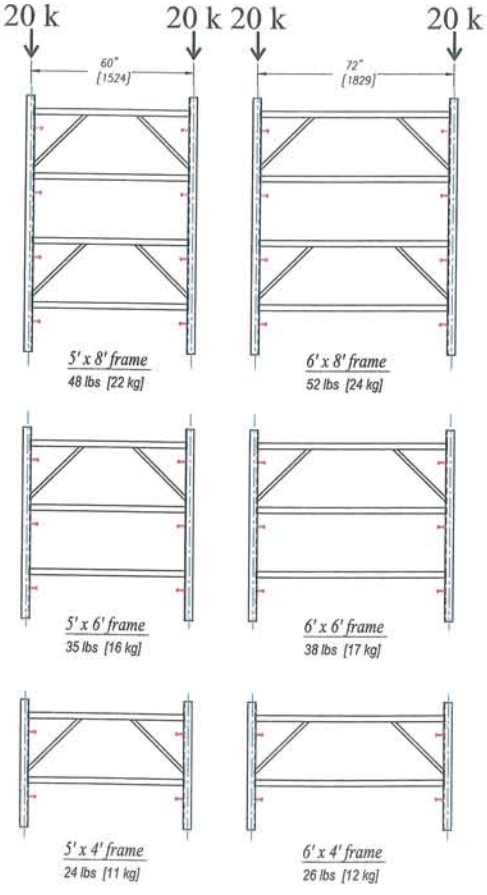

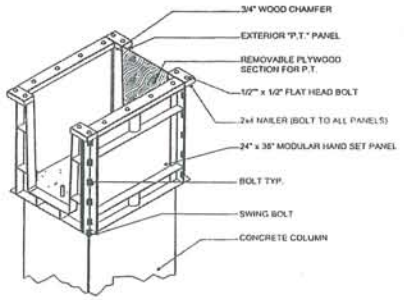

Capital Form

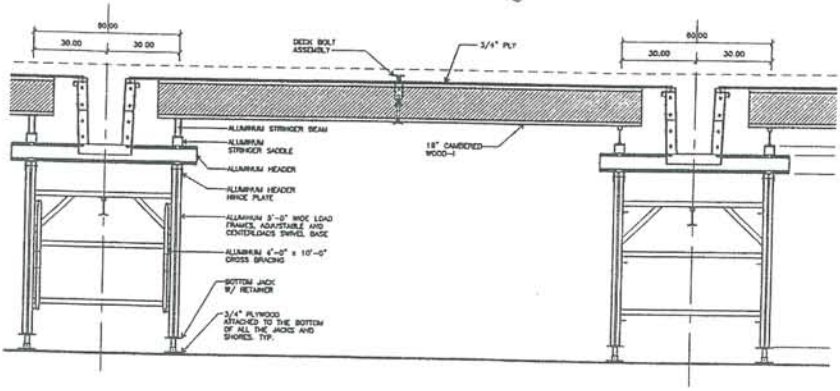

B&D Section

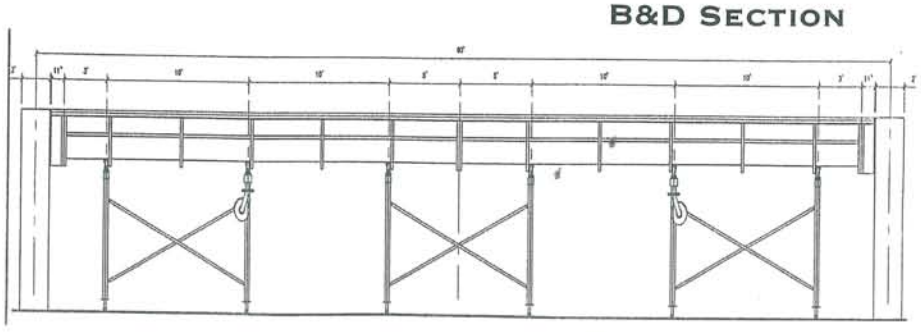

Beam Assembly