EV9324-02

Insurice Twin-i2000² System

Delivers premium quality water for ice applications

Insurice Twin-i2000² System: EV9324-02

i2000² Replacement Cartridge: EV9612-22

BENEFITS

Reduces ice machine problems caused by scale build-up from dirt and dissolved minerals

New and improved Micro-Pure II media inhibits the growth of bacteria

Reduces chlorine taste and odor and other offensive contaminants

Self-contained scale inhibitor feed keeps ice machines functioning at full capacity

Reduces maintenance and service costs by reducing scale and clogging of distribution lines, evaporator plate and pump

Precoat submicron technology reduces dirt and particles as small as 1/2 micron in size and reduces health contaminants such as cysts

Manifold features water shut off, flushing valve and outlet pressure gauge

Sanitary cartridge replacement is simple, quick and clean. Internal filter parts are never exposed to handling or contamination

NSF Certified under NSF/ANSI Standards 42

INSTALLATION TIPS

Choose a mounting location suitable to support the full weight of the system when operating

Never use saddle valve for connection

Use 3/4" water line

Do not connect system to water-cooled condenser

Install vertically with cartridges hanging down and allow 2-1/2" clearance below the cartridge for easy cartridge replacement

Flush cartridges by running water through system for five minutes at full flow

OPERATION TIPS

Change cartridges on a regular 6 month preventative maintenance program

Change cartridges when capacity is reached or when pressure falls below 10 psi

Service flow rate must not exceed 3.34 gpm

Always flush the filter cartridge at time of installation and cartridge change

APPLICATION/SIZING

For ice machine applications

Most cubers up to 1,450 lbs./day

Most flakers up to 2,200 lbs./day

Rated Capacity: 18,000 gallons

Insurice Twin-i2000² System

SPECIFICATIONS

Overall Dimensions:
25.26"H x 16.6"W x 5.5"D

Inlet connection: 3/4"

Outlet connection: 3/4"

Service Flow Rate:
Maximum 3.34 gpm (12.6 Lpm)

Rated Capacity: 18,000 gallons

Pressure Requirements:
10 - 125 psi (0.7 – 8.6 bar), non-shock

Temperature: 35 - 100°F (2 - 38°C)

No electrical connection required

Shipping Weight: 12 lbs.

Operating Weight: 18 lbs.

The contaminants or other substances removed or reduced by this drinking water system are not necessarily in your water. Do not use with water that is microbiologically unsafe or of unknown quality without adequate disinfection before or after the system. Systems certified for cyst reduction may be used with disinfected water that may contain filterable cysts.

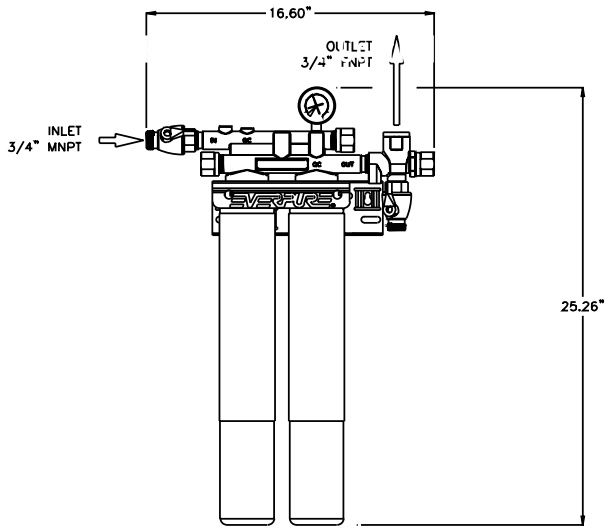

WARRANTY

Everpure water treatment systems (excluding replaceable elements) are covered by a limited warranty against defects in material and workmanship for a period of five years after date of purchase. Everpure replaceable elements (filter cartridges and water treatment cartridges) are covered by a limited warranty against defects in material and workmanship for a period of one year after date of purchase. See printed warranty for details. Everpure will provide a copy of the warranty upon request.

INDEPENDENTLY NSF CERTIFIED

System Tested and Certified by NSF International against NSF/ANSI Standard 42 and 53 for the reduction of:

Standard No. 42: Aesthetic Effects
- Chemical Unit
  - Taste and Odor Reduction
  - Chlorine Reduction
- Mechanical Filtration Unit
  - Particulate Reduction, Class I: 99.9+% reduction of particles one-half micron and larger in size

Standard No. 53: Health Effects
- Mechanical Filtration Unit
  - Turbidity Reduction
  - Cyst Reduction
  - Asbestos Reduction

BELLAQUA
The Cooler Choice
251 Paterson Avenue • East Rutherford, NJ 07073
1-800-562-8872 • 201-460-8379 • Fax 201-460-7172 • Email: Joel@Bellaqua.net
www.Bellaqualnc.com