Ameristar

M801P040AU24-SUB-1A

TAG: _____

SUBMITTAL

Upflow/ Horizontal Induced Draft Single Stage Gas Furnace

M801P040AU24AA

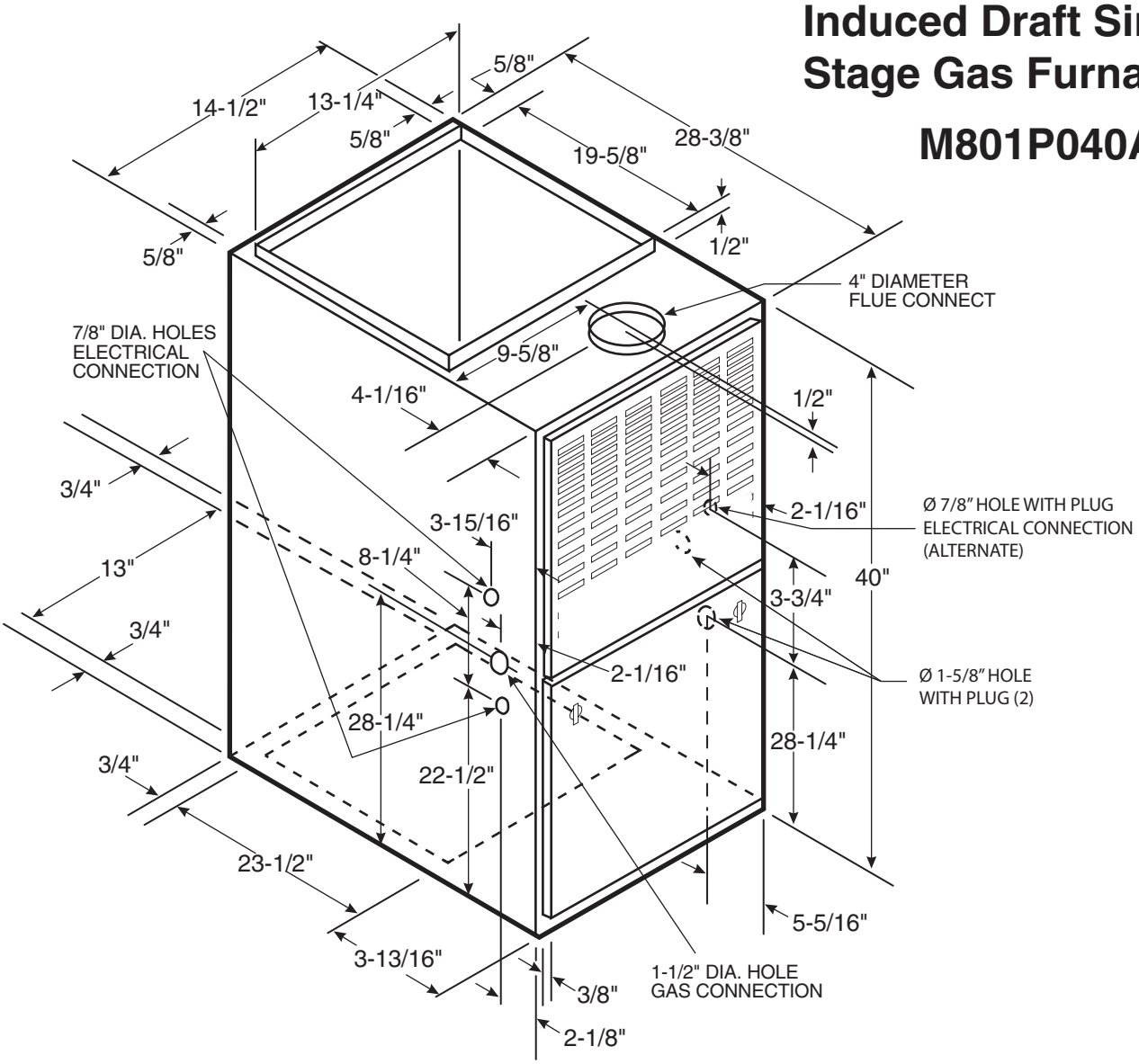

FURNACE AIRFLOW (CFM) VS. EXTERNAL STATIC PRESSURE (IN. W.C.)										
MODEL	**SPEED TAP**	**0.10**	**0.20**	**0.30**	**0.40**	**0.50**	**0.60**	**0.70**	**0.80**	**0.90**
M801P040AU24AA	4-HIGH - Black	1018	1004	982	950	910	860	802	763	660
	3-MED - HIGH - Blue	847	832	809	779	742	697	644	585	517
	2-MED - LOW - Yellow	716	701	678	648	610	585	512	452	384
	1-LOW - Red	617	599	575	544	507	463	413	357	294

CFM VS. TEMPERATURE RISE														
MODEL	**CFM (CUBIC FEET PER MINUTE)**													
	500	600	700	800	900	1000	1100	1200	1300	1400	1500	1600	1700	1800
M801P040AU24AA	54	49	42	37	33	30								

© 2015 Ingersoll Rand

PRODUCT SPECIFICATIONS ①

MODEL	M801P040AU24AA
TYPE	Upflow / Horizontal
RATINGS ②	
Input BTUH ③	40,000
Capacity BTUH (ICS) ③	31,000
Temp. rise (Min.-Max.) °F.	30 - 60
BLOWER DRIVE	Direct
Diameter - Width (In.)	10 x 6
No. Used	1
Speeds (No.)	4
CFM vs. in. w.g.	See Fan Performance Table
Motor HP	1/5
R.P.M.	1080
Volts / Ph / Hz	115/1/60
COMBUSTION FAN - Type	Centrifugal
Drive - No. Speeds	Direct - 1
Motor HP - RPM	1/50 - 3180
Volts / Ph / Hz	115/1/60
FLA	1.09
FILTER — Furnished?	No
Type Recommended	High Velocity
Hi Vel. (No.-Size-Thk.)	1 - 16x25 - 1 in.
VENT — Size (in.)	4 Round

HEAT EXCHANGER	
Type - Fired	Alum. Steel
- Unfired	-
Gauge (Fired)	20
ORIFICES — Main	
Nat. Gas. Qty. — Drill Size	2 — 45
L.P. Gas Qty. — Drill Size	2 — 56
GAS VALVE	Redundant - Single Stage
PILOT SAFETY DEVICE	
Type	Hot Surface Ignition
BURNERS — Type	Multiport Inshot
Number	2
POWER CONN. — V / Ph / Hz ④	115/1/60
Ampacity (In Amps)	5.4
Max. Overcurrent Protection (Amps)	15
PIPE CONN. SIZE (IN.)	1/2
DIMENSIONS	H x W x D
Crated (In.)	41-3/4 x 16-1/2 x 30-1/2
WEIGHT	
Shipping (Lbs.) / Net (Lbs.)	119 / 110

① Central Furnace heating designs are certified to ANSI Z21.47 / CSA 2.3.
② For U.S. applications, above input ratings (BTUH) are up to 2,000 feet, derate 4% per 1,000 feet for elevations above 2,000 feet above sea level.
For Canadian applications, above input ratings (BTUH) are up to 4,500 feet, derate 4% per 1,000 feet for elevations above 4,500 feet above sea level.
③ Based on U.S. government standard tests.
④ The above wiring specifications are in accordance with National Electrical Code; however, installations must comply with local codes.

Mechanical Specifications

NATURAL GAS MODELS - Central Heating furnace designs are certified to ANSI Z21.47 / CSA 2.3 for both natural and L.P. gas. Limit setting and rating data were established and approved under standard rating conditions using American National Standards Institute standards.

SAFE OPERATION - The Integrated System Control has solid state devices, which continuously monitor for presence of flame, when the system is in the heating mode of operation. Slow opening, dual solenoid combination gas valve and regulator provide extra safety and quieter operation.

QUICK HEATING— Durable, cycle tested, heavy gauge **aluminized steel heat exchanger** quickly transfers heat to provide warm conditioned air to the structure. **Low energy power vent blower,** to increase efficiency and provide discharge of gas fumes to the outside, allows common venting with hot water heater.

BURNERS - Multiport Inshot burners will give years of quiet and efficient service. All models can be converted to **L.P. gas** without changing burners.

INTEGRATED SYSTEM CONTROL - Exclusively designed operational program provides total control of furnace limit sensors, blowers, gas valve, flame control and includes self diagnostics for ease of service.

AIR DELIVERY - The multispeed, direct drive blower motor, with sufficient airflow range for most heating and cooling requirements, will switch from heating to cooling speeds on demand from room thermostat. The blower door safety switch will prevent or terminate furnace operation when the blower door is removed. (Fan relay and 35VA control transformer is standard).

STYLING - Heavy gauge steel and "wrap-around" cabinet construction is used in the cabinet with baked-on enamel finish for strength and beauty. The heat exchanger section of the cabinet is completely lined with foil faced fiberglass insulation. This results in quiet and efficient operation due to the excellent acoustical and insulating qualities of fiberglass.

FEATURES AND GENERAL OPERATION - The High Efficiency Gas Furnaces employs a Silicon Nitride Hot Surface Ignition system, which eliminates the waste of a constant burning pilot. The integrated system control lights the main burners upon a demand for heat from the room thermostat. Complete front service access.

a. Low energy power venter

b. Vent proving pressure switch.

Since the manufacturer has a policy of continuous product and product data improvement, it reserves the right to change specifications and design without notice.

Technical Literature - Printed in U.S.A.

Ingersoll Rand
11819 N. Pennsylvania Street
Carmel, IN 46032

Intertek

Library	Ameristar
Product Section	Furnaces
Product	Furnace
Model	M801
Literature Type	Submittal
Sequence	-
Date	05/15
File No.	M801P040AU24-SUB-1A
Supersedes	M801P040AU24-SUB-1

Ameristar

M801P060AU24-SUB-1A

TAG: _____

SUBMITTAL

Upflow/ Horizontal Induced Draft Single Stage Gas Furnace

M801P060AU24AA

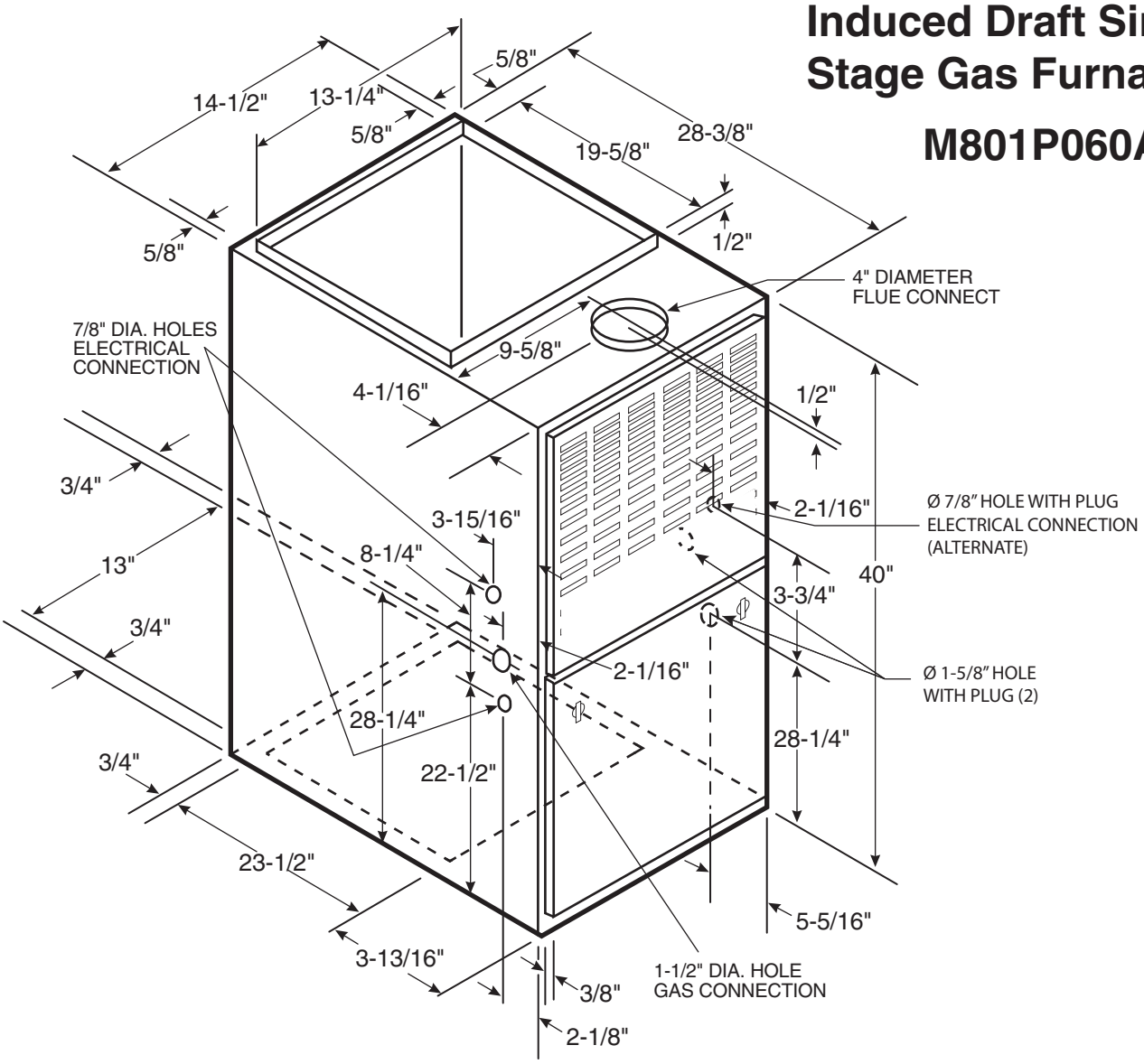

FURNACE AIRFLOW (CFM) VS. EXTERNAL STATIC PRESSURE (IN. W.C.)										
MODEL	**SPEED TAP**	**0.10**	**0.20**	**0.30**	**0.40**	**0.50**	**0.60**	**0.70**	**0.80**	**0.90**
M801P060AU24AA	4-HIGH - Black	1018	997	973	941	901	852	796	731	659
	3-MED - HIGH - Blue	835	821	800	771	734	689	636	575	506
	2-MED - LOW - Yellow	712	702	683	655	617	571	516	452	379
	1-LOW - Red	611	596	573	543	505	459	406	345	277

CFM VS. TEMPERATURE RISE												
MODEL	**CFM (CUBIC FEET PER MINUTE)**											
	500	600	700	800	900	1000	1100	1200	1300	1400	1500	1600
M801P060AU24AA			63	56	49	44						

© 2015 Ingersoll Rand

PRODUCT SPECIFICATIONS ①

MODEL	M801P060AU24AA
TYPE	Upflow / Horizontal
RATINGS ②	
Input BTUH ③	60,000
Capacity BTUH (ICS) ③	47,000
Temp. rise (Min.-Max.) °F.	30 - 60
BLOWER DRIVE	Direct
Diameter - Width (In.)	10 x 6**
No. Used	1
Speeds (No.)	4
CFM vs. in. w.g.	See Fan Performance Table
Motor HP	1/3
R.P.M.	1075
Volts / Ph / Hz	115/1/60
COMBUSTION FAN - Type	Centrifugal
Drive - No. Speeds	Direct - 1
Motor HP - RPM	1/50 - 3180
Volts / Ph / Hz	115/1/60
FLA	1.09
FILTER — Furnished?	No
Type Recommended	High Velocity
Hi Vel. (No.-Size-Thk.)	1 - 16x25 - 1 in.
VENT — Size (in.)	4 Round

HEAT EXCHANGER	
Type - Fired	Alum. Steel
- Unfired	
Gauge (Fired)	20
ORIFICES — Main	
Nat. Gas. Qty. — Drill Size	3 — 45
L.P. Gas Qty. — Drill Size	3 — 56
GAS VALVE	Redundant - Single Stage
PILOT SAFETY DEVICE	
Type	Hot Surface Ignition
BURNERS — Type	Multiport Inshot
Number	3
POWER CONN. — V / Ph / Hz ④	115/1/60
Ampacity (In Amps)	9.0
Max. Overcurrent Protection (Amps)	15
PIPE CONN. SIZE (IN.)	1/2
DIMENSIONS	H x W x D
Crated (In.)	41-3/4 x 16-1/2 x 30-1/2
WEIGHT	
Shipping (Lbs.) / Net (Lbs.)	127 / 118

① Central Furnace heating designs are certified to ANSI Z21.47 / CSA 2.3.
② For U.S. applications, above input ratings (BTUH) are up to 2,000 feet, derate 4% per 1,000 feet for elevations above 2,000 feet above sea level.
For Canadian applications, above input ratings (BTUH) are up to 4,500 feet, derate 4% per 1,000 feet for elevations above 4,500 feet above sea level.
③ Based on U.S. government standard tests.
④ The above wiring specifications are in accordance with National Electrical Code; however, installations must comply with local codes.

Mechanical Specifications

NATURAL GAS MODELS - Central Heating furnace designs are certified to ANSI Z21.47 / CSA 2.3 for both natural and L.P. gas. Limit setting and rating data were established and approved under standard rating conditions using American National Standards Institute standards.

SAFE OPERATION - The Integrated System Control has solid state devices, which continuously monitor for presence of flame, when the system is in the heating mode of operation. Slow opening, dual solenoid combination gas valve and regulator provide extra safety and quieter operation.

QUICK HEATING— Durable, cycle tested, heavy gauge **aluminized steel heat exchanger** quickly transfers heat to provide warm conditioned air to the structure. **Low energy power vent blower,** to increase efficiency and provide discharge of gas fumes to the outside, allows common venting with hot water heater.

BURNERS - Multiport Inshot burners will give years of quiet and efficient service. All models can be converted to **L.P. gas** without changing burners.

INTEGRATED SYSTEM CONTROL - Exclusively designed operational program provides total control of furnace limit sensors, blowers, gas valve, flame control and includes self diagnostics for ease of service.

AIR DELIVERY - The multispeed, direct drive blower motor, with sufficient airflow range for most heating and cooling requirements, will switch from heating to cooling speeds on demand from room thermostat. The blower door safety switch will prevent or terminate furnace operation when the blower door is removed. (Fan relay and 35VA control transformer is standard).

STYLING - Heavy gauge steel and "wrap-around" cabinet construction is used in the cabinet with baked-on enamel finish for strength and beauty. The heat exchanger section of the cabinet is completely lined with foil faced fiberglass insulation. This results in quiet and efficient operation due to the excellent acoustical and insulating qualities of fiberglass.

FEATURES AND GENERAL OPERATION - The High Efficiency Gas Furnaces employs a Silicon Nitride Hot Surface Ignition system, which eliminates the waste of a constant burning pilot. The integrated system control lights the main burners upon a demand for heat from the room thermostat. Complete front service access.

a. Low energy power venter

b. Vent proving pressure switch.

Since the manufacturer has a policy of continuous product and product data improvement, it reserves the right to change specifications and design without notice.

Technical Literature - Printed in U.S.A.

Ingersoll Rand
11819 N. Pennsylvania Street
Carmel, IN 46032

Intertek

Library	Ameristar
Product Section	Furnaces
Product	Furnace
Model	M801
Literature Type	Submittal
Sequence	-
Date	05/15
File No.	M801P060AU24-SUB-1A
Supersedes	M801P060AU24-SUB-1

Ameristar

M801P060AU36-SUB-1A

TAG: _____

SUBMITTAL

Upflow/ Horizontal Induced Draft Single Stage Gas Furnace

M801P060AU36AA

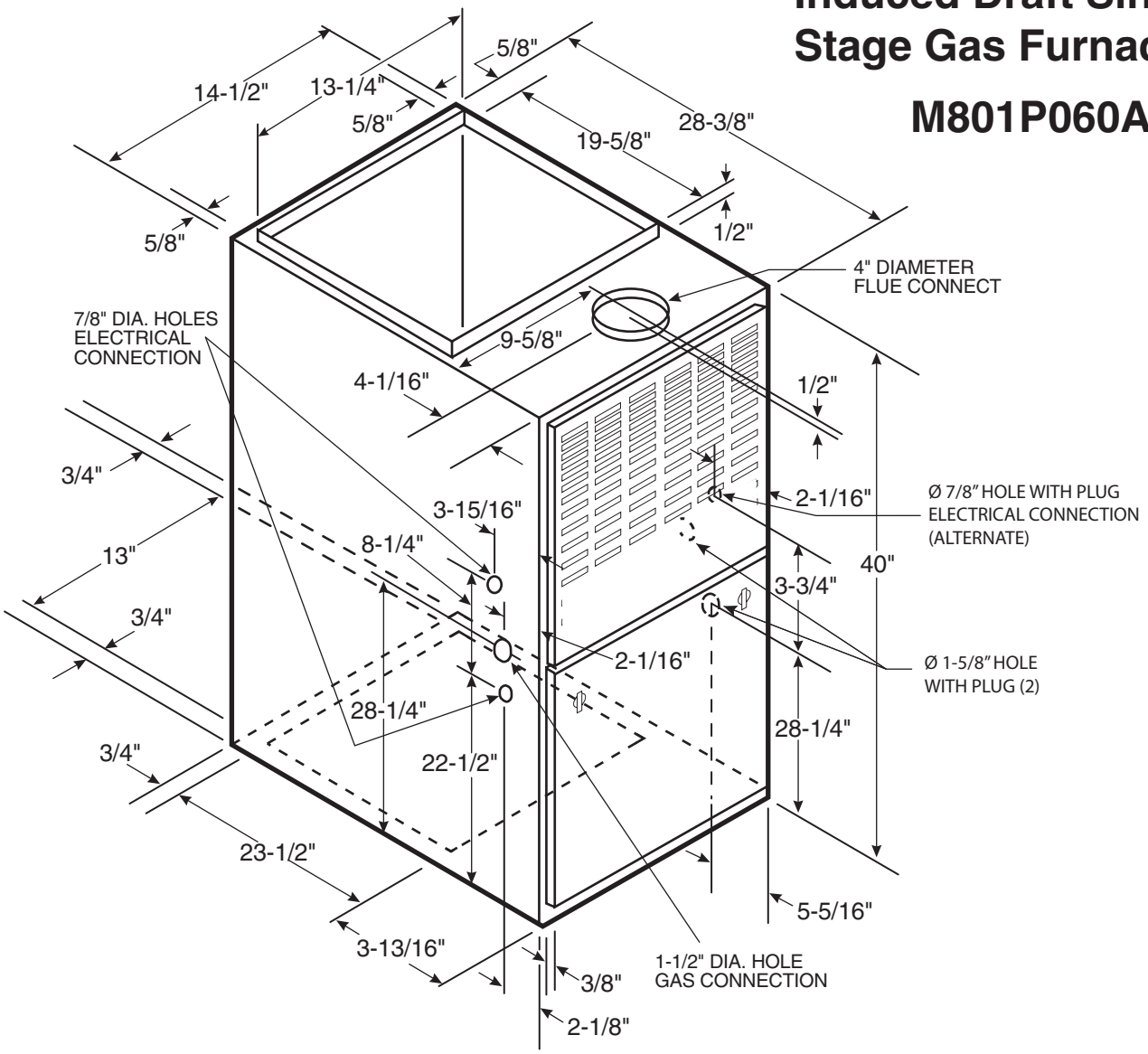

FURNACE AIRFLOW (CFM) VS. EXTERNAL STATIC PRESSURE (IN. W.C.)										
MODEL	**SPEED TAP**	**0.10**	**0.20**	**0.30**	**0.40**	**0.50**	**0.60**	**0.70**	**0.80**	**0.90**
M801P060AU36AA	4-HIGH - Black	1426	1389	1345	1298	1236	1171	1099	1020	934
	3-MED - HIGH - Blue	1243	1225	1197	1160	1113	1057	991	916	831
	2-MED - LOW - Yellow	1042	1039	1027	1005	973	931	879	817	745
	1-LOW - Red	900	903	895	877	848	809	760	700	629

CFM VS. TEMPERATURE RISE													
MODEL	**CFM (CUBIC FEET PER MINUTE)**												
	500	600	700	800	900	1000	1100	1200	1300	1400	1500	1600	1700
M801P060AU36AA				56	49	44	40	37	34	32			

© 2015 Ingersoll Rand

PRODUCT SPECIFICATIONS ①

MODEL	M801P060AU36AA
TYPE	Upflow / Horizontal
RATINGS ②	
Input BTUH ③	60,000
Capacity BTUH (ICS) ③	47,000
Temp. rise (Min.-Max.) °F.	30 - 60
BLOWER DRIVE	Direct
Diameter - Width (In.)	10 x 6**
No. Used	1
Speeds (No.)	4
CFM vs. in. w.g.	See Fan Performance Table
Motor HP	1/3
R.P.M.	1075
Volts / Ph / Hz	115/1/60
COMBUSTION FAN - Type	Centrifugal
Drive - No. Speeds	Direct - 1
Motor HP - RPM	1/50 - 3180
Volts / Ph / Hz	115/1/60
FLA	1.09
FILTER — Furnished?	No
Type Recommended	High Velocity
Hi Vel. (No.-Size-Thk.)	1 - 16x25 - 1 in.
VENT — Size (in.)	4 Round

HEAT EXCHANGER	
Type - Fired	Alum. Steel
- Unfired	
Gauge (Fired)	20
ORIFICES — Main	
Nat. Gas. Qty. — Drill Size	3 — 45
L.P. Gas Qty. — Drill Size	3 — 56
GAS VALVE	Redundant - Single Stage
PILOT SAFETY DEVICE	
Type	Hot Surface Ignition
BURNERS — Type	Multiport Inshot
Number	3
POWER CONN. — V / Ph / Hz ④	115/1/60
Ampacity (In Amps)	9.0
Max. Overcurrent Protection (Amps)	15
PIPE CONN. SIZE (IN.)	1/2
DIMENSIONS	H x W x D
Crated (In.)	41-3/4 x 16-1/2 x 30-1/2
WEIGHT	
Shipping (Lbs.) / Net (Lbs.)	127 / 118

① Central Furnace heating designs are certified to ANSI Z21.47 / CSA 2.3.
② For U.S. applications, above input ratings (BTUH) are up to 2,000 feet, derate 4% per 1,000 feet for elevations above 2,000 feet above sea level.
For Canadian applications, above input ratings (BTUH) are up to 4,500 feet, derate 4% per 1,000 feet for elevations above 4,500 feet above sea level.
③ Based on U.S. government standard tests.
④ The above wiring specifications are in accordance with National Electrical Code; however, installations must comply with local codes.

Mechanical Specifications

NATURAL GAS MODELS - Central Heating furnace designs are certified to ANSI Z21.47 / CSA 2.3 for both natural and L.P. gas. Limit setting and rating data were established and approved under standard rating conditions using American National Standards Institute standards.

SAFE OPERATION - The Integrated System Control has solid state devices, which continuously monitor for presence of flame, when the system is in the heating mode of operation. Slow opening, dual solenoid combination gas valve and regulator provide extra safety and quieter operation.

QUICK HEATING— Durable, cycle tested, heavy gauge **aluminized steel heat exchanger** quickly transfers heat to provide warm conditioned air to the structure. **Low energy power vent blower,** to increase efficiency and provide discharge of gas fumes to the outside, allows common venting with hot water heater.

BURNERS - Multiport Inshot burners will give years of quiet and efficient service. All models can be converted to **L.P. gas** without changing burners.

INTEGRATED SYSTEM CONTROL - Exclusively designed operational program provides total control of furnace limit sensors, blowers, gas valve, flame control and includes self diagnostics for ease of service.

AIR DELIVERY - The multispeed, direct drive blower motor, with sufficient airflow range for most heating and cooling requirements, will switch from heating to cooling speeds on demand from room thermostat. The blower door safety switch will prevent or terminate furnace operation when the blower door is removed. (Fan relay and 35VA control transformer is standard).

STYLING - Heavy gauge steel and "wrap-around" cabinet construction is used in the cabinet with baked-on enamel finish for strength and beauty. The heat exchanger section of the cabinet is completely lined with foil faced fiberglass insulation. This results in quiet and efficient operation due to the excellent acoustical and insulating qualities of fiberglass.

FEATURES AND GENERAL OPERATION - The High Efficiency Gas Furnaces employs a Silicon Nitride Hot Surface Ignition system, which eliminates the waste of a constant burning pilot. The integrated system control lights the main burners upon a demand for heat from the room thermostat. Complete front service access.

a. Low energy power venter

b. Vent proving pressure switch.

Since the manufacturer has a policy of continuous product and product data improvement, it reserves the right to change specifications and design without notice.

Technical Literature - Printed in U.S.A.

Ingersoll Rand
11819 N. Pennsylvania Street
Carmel, IN 46032

Intertek

Library	Ameristar
Product Section	Furnaces
Product	Furnace
Model	M801
Literature Type	Submittal
Sequence	-
Date	05/15
File No.	M801P060AU36-SUB-1A
Supersedes	M801P060AU36-SUB-1

Ameristar

M801P080BU36-SUB-1A

TAG: _____

SUBMITTAL

Upflow/ Horizontal Induced Draft Single Stage Gas Furnace

M801P080BU36AA

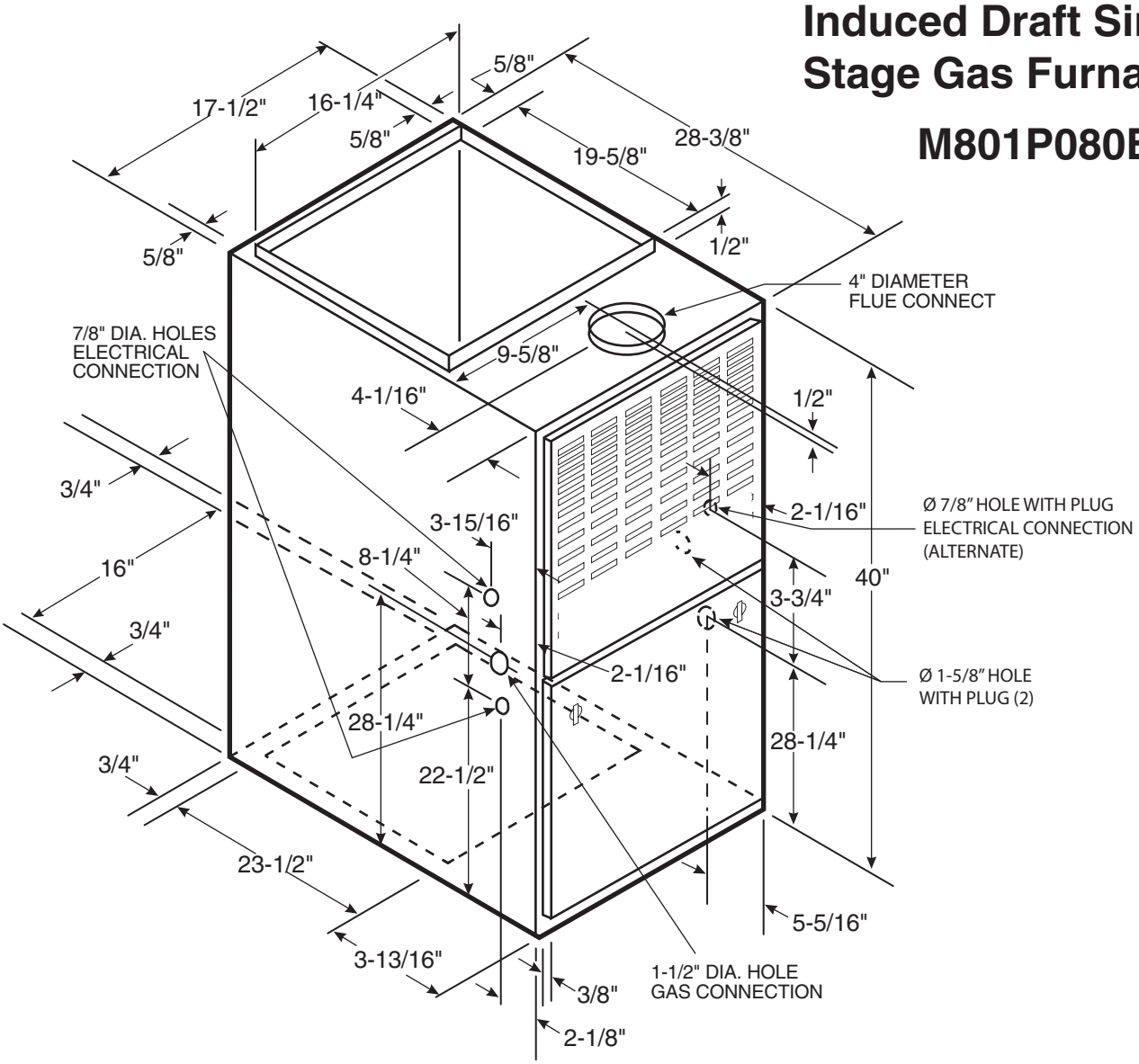

FURNACE AIRFLOW (CFM) VS. EXTERNAL STATIC PRESSURE (IN. W.C.)										
MODEL	**SPEED TAP**	**0.10**	**0.20**	**0.30**	**0.40**	**0.50**	**0.60**	**0.70**	**0.80**	**0.90**
M801P080BU36AA	4-HIGH - Black	1393	1384	1364	1335	1296	1247	1189	1120	1042
	3-MED - HIGH - Blue	1210	1209	1198	1177	1147	1107	1058	999	930
	2-MED - LOW - Yellow	1046	1052	1047	1033	1008	973	928	873	808
	1-LOW - Red	900	903	895	888	869	842	808	766	717

CFM VS. TEMPERATURE RISE												
MODEL	**CFM (CUBIC FEET PER MINUTE)**											
	500	600	700	800	900	1000	1100	1200	1300	1400	1500	1600
M801P080BU36AA						59	54	49	46	42		

© 2015 Ingersoll Rand

PRODUCT SPECIFICATIONS ①

MODEL	M801P080BU36AA
TYPE	Upflow / Horizontal
RATINGS ②	
Input BTUH ③	80,000
Capacity BTUH (ICS) ③	63,000
Temp. rise (Min.-Max.) °F.	30 - 60
BLOWER DRIVE	Direct
Diameter - Width (In.)	10 x 7
No. Used	1
Speeds (No.)	4
CFM vs. in. w.g.	See Fan Performance Table
Motor HP	1/3
R.P.M.	1075
Volts / Ph / Hz	115/1/60
COMBUSTION FAN - Type	Centrifugal
Drive - No. Speeds	Direct - 1
Motor HP - RPM	1/50 - 3180
Volts / Ph / Hz	115/1/60
FLA	1.09
FILTER — Furnished?	No
Type Recommended	High Velocity
Hi Vel. (No.-Size-Thk.)	1 - 17x25 - 1 in.
VENT — Size (in.)	4 Round

HEAT EXCHANGER	
Type - Fired	Alum. Steel
- Unfired	
Gauge (Fired)	20
ORIFICES — Main	
Nat. Gas. Qty. — Drill Size	4 — 45
L.P. Gas Qty. — Drill Size	4 — 56
GAS VALVE	Redundant - Single Stage
PILOT SAFETY DEVICE	
Type	Hot Surface Ignition
BURNERS — Type	Multiport Inshot
Number	4
POWER CONN. — V / Ph / Hz ④	115/1/60
Ampacity (In Amps)	9.0
Max. Overcurrent Protection (Amps)	15
PIPE CONN. SIZE (IN.)	1/2
DIMENSIONS	H x W x D
Crated (In.)	41-3/4 x 19-1/2 x 30-1/2
WEIGHT	
Shipping (Lbs.) / Net (Lbs.)	142 / 132

① Central Furnace heating designs are certified to ANSI Z21.47 / CSA 2.3.
② For U.S. applications, above input ratings (BTUH) are up to 2,000 feet, derate 4% per 1,000 feet for elevations above 2,000 feet above sea level.
For Canadian applications, above input ratings (BTUH) are up to 4,500 feet, derate 4% per 1,000 feet for elevations above 4,500 feet above sea level.
③ Based on U.S. government standard tests.
④ The above wiring specifications are in accordance with National Electrical Code; however, installations must comply with local codes.

Mechanical Specifications

NATURAL GAS MODELS - Central Heating furnace designs are certified to ANSI Z21.47 / CSA 2.3 for both natural and L.P. gas. Limit setting and rating data were established and approved under standard rating conditions using American National Standards Institute standards.

SAFE OPERATION - The Integrated System Control has solid state devices, which continuously monitor for presence of flame, when the system is in the heating mode of operation. Slow opening, dual solenoid combination gas valve and regulator provide extra safety and quieter operation.

QUICK HEATING— Durable, cycle tested, heavy gauge **aluminized steel heat exchanger** quickly transfers heat to provide warm conditioned air to the structure. **Low energy power vent blower,** to increase efficiency and provide discharge of gas fumes to the outside, allows common venting with hot water heater.

BURNERS - Multiport Inshot burners will give years of quiet and efficient service. All models can be converted to **L.P. gas** without changing burners.

INTEGRATED SYSTEM CONTROL - Exclusively designed operational program provides total control of furnace limit sensors, blowers, gas valve, flame control and includes self diagnostics for ease of service.

AIR DELIVERY - The multispeed, direct drive blower motor, with sufficient airflow range for most heating and cooling requirements, will switch from heating to cooling speeds on demand from room thermostat. The blower door safety switch will prevent or terminate furnace operation when the blower door is removed. (Fan relay and 35VA control transformer is standard).

STYLING - Heavy gauge steel and "wrap-around" cabinet construction is used in the cabinet with baked-on enamel finish for strength and beauty. The heat exchanger section of the cabinet is completely lined with foil faced fiberglass insulation. This results in quiet and efficient operation due to the excellent acoustical and insulating qualities of fiberglass.

FEATURES AND GENERAL OPERATION - The High Efficiency Gas Furnaces employs a Silicon Nitride Hot Surface Ignition system, which eliminates the waste of a constant burning pilot. The integrated system control lights the main burners upon a demand for heat from the room thermostat. Complete front service access.

a. Low energy power venter

b. Vent proving pressure switch.

Since the manufacturer has a policy of continuous product and product data improvement, it reserves the right to change specifications and design without notice.

Technical Literature - Printed in U.S.A.

Ingersoll Rand
11819 N. Pennsylvania Street
Carmel, IN 46032

Intertek

Library	Ameristar
Product Section	Furnaces
Product	Furnace
Model	M801
Literature Type	Submittal
Sequence	-
Date	05/15
File No.	M801P080BU36-SUB-1A
Supersedes	M801P080BU36-SUB-1

Ameristar

M801P080BU48-SUB-1A

TAG: _____

SUBMITTAL

Upflow/ Horizontal Induced Draft Single Stage Gas Furnace

M801P080BU48AA

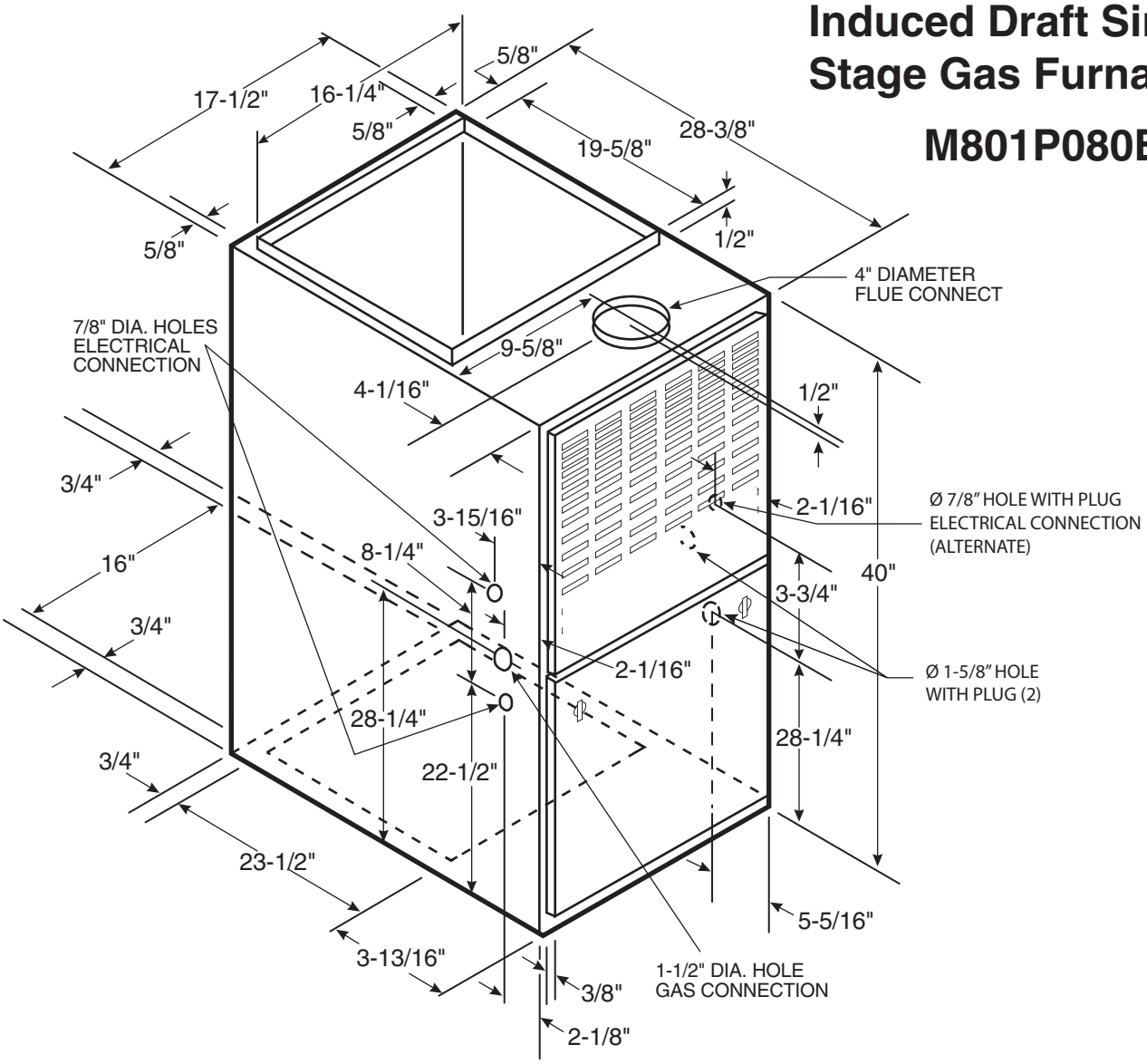

FURNACE AIRFLOW (CFM) VS. EXTERNAL STATIC PRESSURE (IN. W.C.)										
MODEL	**SPEED TAP**	**0.10**	**0.20**	**0.30**	**0.40**	**0.50**	**0.60**	**0.70**	**0.80**	**0.90**
M801P080BU48AA	4-HIGH - Black	1839	1821	1796	1756	1710	1641	1573	1480	1392
	3-MED - HIGH - Blue	1323	1325	1329	1319	1308	1275	1246	1201	1165
	2-MED - LOW - Yellow	1092	1090	1091	1083	1076	1059	1040	1005	970
	1-LOW - Red	788	783	780	768	758	737	719	674	630

CFM VS. TEMPERATURE RISE														
MODEL	**CFM (CUBIC FEET PER MINUTE)**													
	500	600	700	800	900	1000	1100	1200	1300	1400	1500	1600	1700	1800
M801P080BU48AA							67	62	57	53	49			

© 2015 Ingersoll Rand

PRODUCT SPECIFICATIONS ①

MODEL	M801P080BU48AA
TYPE	Upflow / Horizontal
RATINGS ②	
Input BTUH ③	80,000
Capacity BTUH (ICS) ③	64,000
Temp. rise (Min.-Max.) °F.	30 - 60
BLOWER DRIVE	Direct
Diameter - Width (In.)	10 x 8
No. Used	1
Speeds (No.)	4
CFM vs. in. w.g.	See Fan Performance Table
Motor HP	1/3
R.P.M.	1075
Volts / Ph / Hz	115/1/60
COMBUSTION FAN - Type	Centrifugal
Drive - No. Speeds	Direct - 1
Motor HP - RPM	1/50 - 3180
Volts / Ph / Hz	115/1/60
FLA	1.09
FILTER — Furnished?	No
Type Recommended	High Velocity
Hi Vel. (No.-Size-Thk.)	1 - 17x25 - 1 in.
VENT — Size (in.)	4 Round

HEAT EXCHANGER	
Type - Fired	Alum. Steel
- Unfired	
Gauge (Fired)	20
ORIFICES — Main	
Nat. Gas. Qty. — Drill Size	4 — 45
L.P. Gas Qty. — Drill Size	4 — 56
GAS VALVE	Redundant - Single Stage
PILOT SAFETY DEVICE	
Type	Hot Surface Ignition
BURNERS — Type	Multiport Inshot
Number	4
POWER CONN. — V / Ph / Hz ④	115/1/60
Ampacity (In Amps)	9.8
Max. Overcurrent Protection (Amps)	15
PIPE CONN. SIZE (IN.)	1/2
DIMENSIONS	H x W x D
Crated (In.)	41-3/4 x 19-1/2 x 30-1/2
WEIGHT	
Shipping (Lbs.) / Net (Lbs.)	142 / 132

① Central Furnace heating designs are certified to ANSI Z21.47 / CSA 2.3.
② For U.S. applications, above input ratings (BTUH) are up to 2,000 feet, derate 4% per 1,000 feet for elevations above 2,000 feet above sea level.
For Canadian applications, above input ratings (BTUH) are up to 4,500 feet, derate 4% per 1,000 feet for elevations above 4,500 feet above sea level.
③ Based on U.S. government standard tests.
④ The above wiring specifications are in accordance with National Electrical Code; however, installations must comply with local codes.

Mechanical Specifications

NATURAL GAS MODELS - Central Heating furnace designs are certified to ANSI Z21.47 / CSA 2.3 for both natural and L.P. gas. Limit setting and rating data were established and approved under standard rating conditions using American National Standards Institute standards.

SAFE OPERATION - The Integrated System Control has solid state devices, which continuously monitor for presence of flame, when the system is in the heating mode of operation. Slow opening, dual solenoid combination gas valve and regulator provide extra safety and quieter operation.

QUICK HEATING— Durable, cycle tested, heavy gauge **aluminized steel heat exchanger** quickly transfers heat to provide warm conditioned air to the structure. **Low energy power vent blower,** to increase efficiency and provide discharge of gas fumes to the outside, allows common venting with hot water heater.

BURNERS - Multiport Inshot burners will give years of quiet and efficient service. All models can be converted to **L.P. gas** without changing burners.

INTEGRATED SYSTEM CONTROL - Exclusively designed operational program provides total control of furnace limit sensors, blowers, gas valve, flame control and includes self diagnostics for ease of service.

AIR DELIVERY - The multispeed, direct drive blower motor, with sufficient airflow range for most heating and cooling requirements, will switch from heating to cooling speeds on demand from room thermostat. The blower door safety switch will prevent or terminate furnace operation when the blower door is removed. (Fan relay and 35VA control transformer is standard).

STYLING - Heavy gauge steel and "wrap-around" cabinet construction is used in the cabinet with baked-on enamel finish for strength and beauty. The heat exchanger section of the cabinet is completely lined with foil faced fiberglass insulation. This results in quiet and efficient operation due to the excellent acoustical and insulating qualities of fiberglass.

FEATURES AND GENERAL OPERATION - The High Efficiency Gas Furnaces employs a Silicon Nitride Hot Surface Ignition system, which eliminates the waste of a constant burning pilot. The integrated system control lights the main burners upon a demand for heat from the room thermostat. Complete front service access.

a. Low energy power venter

b. Vent proving pressure switch.

Since the manufacturer has a policy of continuous product and product data improvement, it reserves the right to change specifications and design without notice.

Technical Literature - Printed in U.S.A.

Ingersoll Rand
11819 N. Pennsylvania Street
Carmel, IN 46032

Intertek

Library	Ameristar
Product Section	Furnaces
Product	Furnace
Model	M801
Literature Type	Submittal
Sequence	-
Date	05/15
File No.	M801P080BU48-SUB-1A
Supersedes	M801P080BU48-SUB-1

Ameristar

M801P100BU36-SUB-1A

TAG: _____

SUBMITTAL

Upflow/ Horizontal Induced Draft Single Stage Gas Furnace

M801P100BU36AA

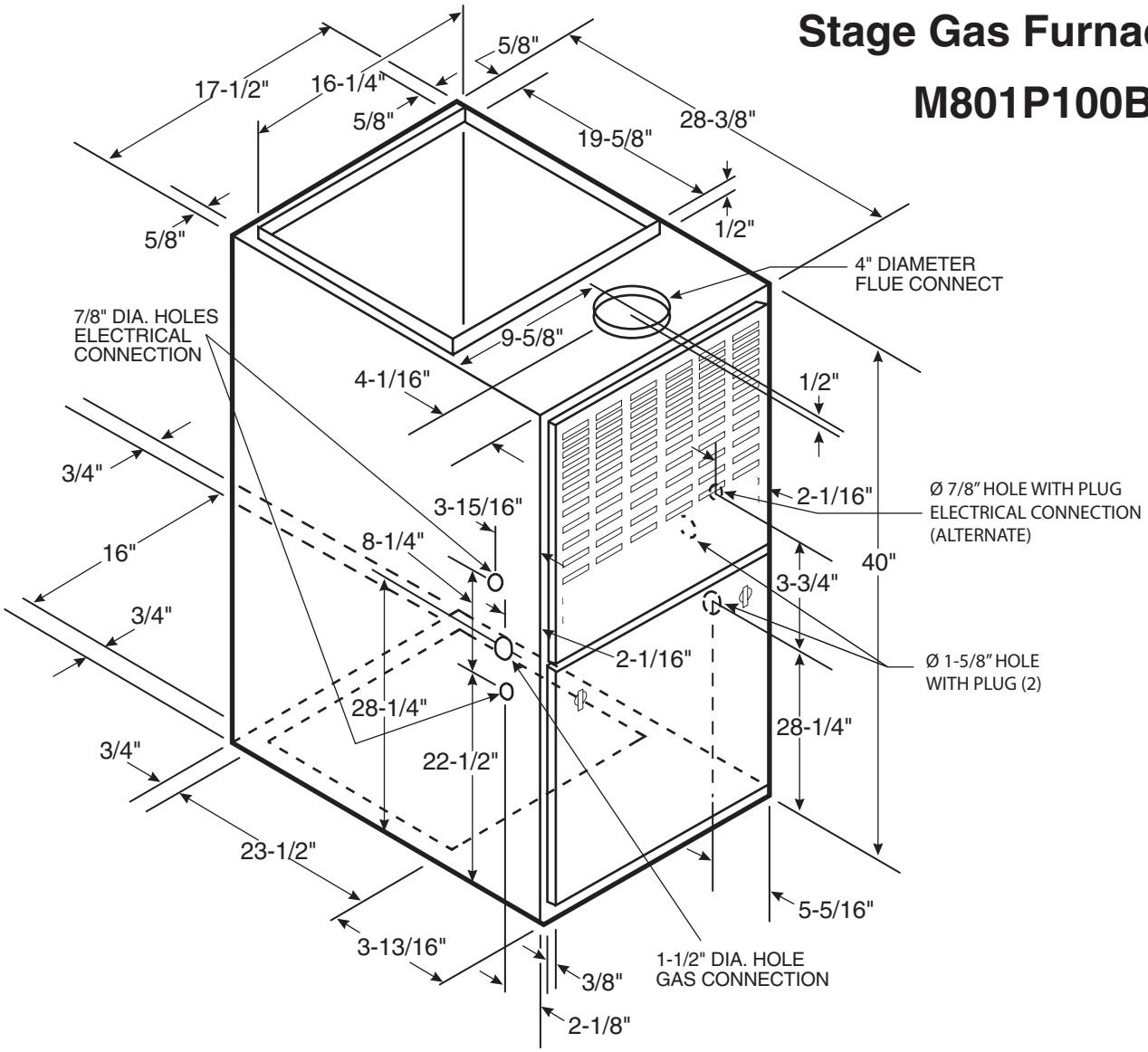

FURNACE AIRFLOW (CFM) VS. EXTERNAL STATIC PRESSURE (IN. W.C.)										
MODEL	**SPEED TAP**	**0.10**	**0.20**	**0.30**	**0.40**	**0.50**	**0.60**	**0.70**	**0.80**	**0.90**
M801P100BU36AA	4-HIGH - Black	1476	1464	1441	1408	1363	1307	1241	1163	1074
	3-MED - HIGH - Blue	1249	1257	1252	1234	1203	1158	1101	1030	946
	2-MED - LOW - Yellow	1020	1046	1058	1050	1028	990	936	866	780
	1-LOW - Red	873	887	890	883	864	834	794	742	680

CFM VS. TEMPERATURE RISE															
MODEL	**CFM (CUBIC FEET PER MINUTE)**														
	500	600	700	800	900	1000	1100	1200	1300	1400	1500	1600	1700	1800	1900
M801P100BU36AA						58	52	49	46	42	40	37	35	33	

© 2015 Ingersoll Rand

PRODUCT SPECIFICATIONS ①

MODEL	M801P100BU36AA
TYPE	Upflow / Horizontal
RATINGS ②	
Input BTUH ③	100,000
Capacity BTUH (ICS) ③	79,000
Temp. rise (Min.-Max.) °F.	40 - 70
BLOWER DRIVE	Direct
Diameter - Width (In.)	10 x 7
No. Used	1
Speeds (No.)	4
CFM vs. in. w.g.	See Fan Performance Table
Motor HP	1/3
R.P.M.	1075
Volts / Ph / Hz	115/1/60
COMBUSTION FAN - Type	Centrifugal
Drive - No. Speeds	Direct - 1
Motor HP - RPM	1/50 - 3180
Volts / Ph / Hz	115/1/60
FLA	1.09
FILTER — Furnished?	No
Type Recommended	High Velocity
Hi Vel. (No.-Size-Thk.)	1 - 17x25 - 1 in.
VENT — Size (in.)	4 Round

HEAT EXCHANGER	
Type - Fired	Alum. Steel
- Unfired	
Gauge (Fired)	20
ORIFICES — Main	
Nat. Gas. Qty. — Drill Size	5 — 45
L.P. Gas Qty. — Drill Size	5 — 56
GAS VALVE	Redundant - Single Stage
PILOT SAFETY DEVICE	
Type	Hot Surface Ignition
BURNERS — Type	Multiport Inshot
Number	5
POWER CONN. — V / Ph / Hz ④	115/1/60
Ampacity (In Amps)	9.0
Max. Overcurrent Protection (Amps)	15
PIPE CONN. SIZE (IN.)	1/2
DIMENSIONS	H x W x D
Crated (In.)	41-3/4 x 19-1/2 x 30-1/2
WEIGHT	
Shipping (Lbs.) / Net (Lbs.)	151 / 141

① Central Furnace heating designs are certified to ANSI Z21.47 / CSA 2.3.
② For U.S. applications, above input ratings (BTUH) are up to 2,000 feet, derate 4% per 1,000 feet for elevations above 2,000 feet above sea level.
For Canadian applications, above input ratings (BTUH) are up to 4,500 feet, derate 4% per 1,000 feet for elevations above 4,500 feet above sea level.
③ Based on U.S. government standard tests.
④ The above wiring specifications are in accordance with National Electrical Code; however, installations must comply with local codes.

Mechanical Specifications

NATURAL GAS MODELS - Central Heating furnace designs are certified to ANSI Z21.47 / CSA 2.3 for both natural and L.P. gas. Limit setting and rating data were established and approved under standard rating conditions using American National Standards Institute standards.

SAFE OPERATION - The Integrated System Control has solid state devices, which continuously monitor for presence of flame, when the system is in the heating mode of operation. Slow opening, dual solenoid combination gas valve and regulator provide extra safety and quieter operation.

QUICK HEATING— Durable, cycle tested, heavy gauge **aluminized steel heat exchanger** quickly transfers heat to provide warm conditioned air to the structure. **Low energy power vent blower,** to increase efficiency and provide discharge of gas fumes to the outside, allows common venting with hot water heater.

BURNERS - Multiport Inshot burners will give years of quiet and efficient service. All models can be converted to **L.P. gas** without changing burners.

INTEGRATED SYSTEM CONTROL - Exclusively designed operational program provides total control of furnace limit sensors, blowers, gas valve, flame control and includes self diagnostics for ease of service.

AIR DELIVERY - The multispeed, direct drive blower motor, with sufficient airflow range for most heating and cooling requirements, will switch from heating to cooling speeds on demand from room thermostat. The blower door safety switch will prevent or terminate furnace operation when the blower door is removed. (Fan relay and 35VA control transformer is standard).

STYLING - Heavy gauge steel and "wrap-around" cabinet construction is used in the cabinet with baked-on enamel finish for strength and beauty. The heat exchanger section of the cabinet is completely lined with foil faced fiberglass insulation. This results in quiet and efficient operation due to the excellent acoustical and insulating qualities of fiberglass.

FEATURES AND GENERAL OPERATION - The High Efficiency Gas Furnaces employs a Silicon Nitride Hot Surface Ignition system, which eliminates the waste of a constant burning pilot. The integrated system control lights the main burners upon a demand for heat from the room thermostat. Complete front service access.

a. Low energy power venter

b. Vent proving pressure switch.

Since the manufacturer has a policy of continuous product and product data improvement, it reserves the right to change specifications and design without notice.

Technical Literature - Printed in U.S.A.

Ingersoll Rand
11819 N. Pennsylvania Street
Carmel, IN 46032

Intertek

Library	Ameristar
Product Section	Furnaces
Product	Furnace
Model	M801
Literature Type	Submittal
Sequence	-
Date	05/15
File No.	M801P100BU36-SUB-1A
Supersedes	M801P100BU36-SUB-1

Ameristar

M801P100CU48-SUB-1A

TAG: _____

SUBMITTAL

Upflow/ Horizontal Induced Draft Single Stage Gas Furnace

M801P100CU48AA

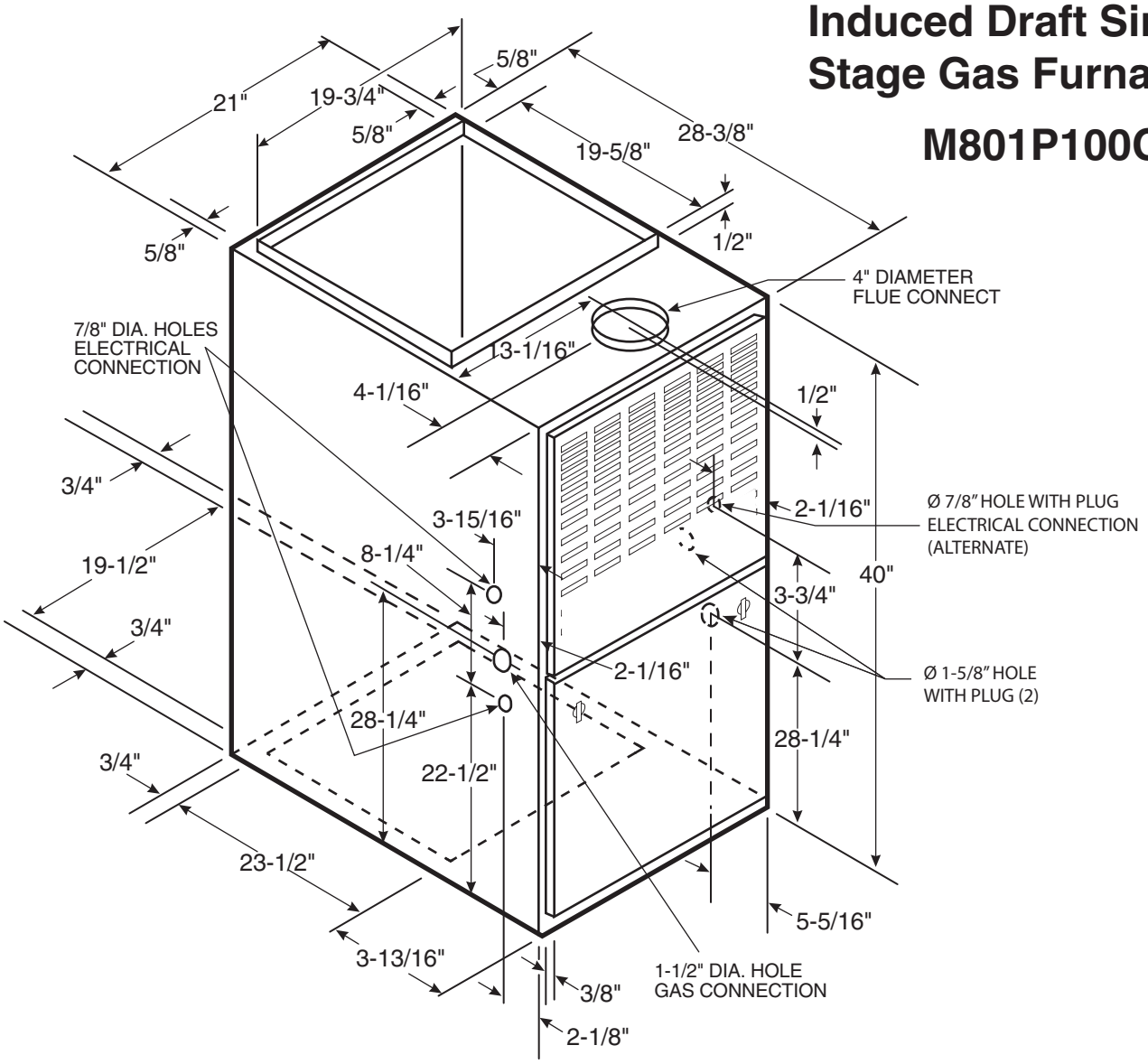

FURNACE AIRFLOW (CFM) VS. EXTERNAL STATIC PRESSURE (IN. W.C.)										
MODEL	**SPEED TAP**	**0.10**	**0.20**	**0.30**	**0.40**	**0.50**	**0.60**	**0.70**	**0.80**	**0.90**
M801P100CU48AA	4-HIGH - Black	1880	1846	1799	1740	1669	1595	1489	1381	1260
	3-MED - HIGH - Blue	1662	1635	1598	1551	1493	1424	1345	1256	1157
	2-MED - LOW - Yellow	1428	1421	1402	1370	1326	1269	1199	1117	1022
	1-LOW - Red	1208	1215	1210	1193	1164	1124	1073	1009	935

CFM VS. TEMPERATURE RISE														
MODEL	**CFM (CUBIC FEET PER MINUTE)**													
	800	900	1000	1100	1200	1300	1400	1500	1600	1700	1800	1900	2000	2100
M801P100CU48AA				67	62	57	53	49	46	44	41	39	37	

© 2015 Ingersoll Rand

PRODUCT SPECIFICATIONS ①

MODEL	M801P100CU48AA
TYPE	Upflow / Horizontal
RATINGS ②	
Input BTUH ③	100,000
Capacity BTUH (ICS) ③	79,000
Temp. rise (Min.-Max.) °F.	35 - 65
BLOWER DRIVE	Direct
Diameter - Width (In.)	10 x 8
No. Used	1
Speeds (No.)	4
CFM vs. in. w.g.	See Fan Performance Table
Motor HP	1/2
R.P.M.	1075
Volts / Ph / Hz	115/1/60
COMBUSTION FAN - Type	Centrifugal
Drive - No. Speeds	Direct - 1
Motor HP - RPM	1/50 - 3180
Volts / Ph / Hz	115/1/60
FLA	1.09
FILTER — Furnished?	No
Type Recommended	High Velocity
Hi Vel. (No.-Size-Thk.)	1 - 20x25 - 1 in.
VENT — Size (in.)	4 Round

HEAT EXCHANGER	
Type - Fired	Alum. Steel
- Unfired	
Gauge (Fired)	20
ORIFICES — Main	
Nat. Gas. Qty. — Drill Size	5 — 45
L.P. Gas Qty. — Drill Size	5 — 56
GAS VALVE	Redundant - Single Stage
PILOT SAFETY DEVICE	
Type	Hot Surface Ignition
BURNERS — Type	Multiport Inshot
Number	5
POWER CONN. — V / Ph / Hz ④	115/1/60
Ampacity (In Amps)	11.6
Max. Overcurrent Protection (Amps)	15
PIPE CONN. SIZE (IN.)	1/2
DIMENSIONS	H x W x D
Crated (In.)	41-3/4 x 23 x 30-1/2
WEIGHT	
Shipping (Lbs.) / Net (Lbs.)	162 / 151

① Central Furnace heating designs are certified to ANSI Z21.47 / CSA 2.3.
② For U.S. applications, above input ratings (BTUH) are up to 2,000 feet, derate 4% per 1,000 feet for elevations above 2,000 feet above sea level.
For Canadian applications, above input ratings (BTUH) are up to 4,500 feet, derate 4% per 1,000 feet for elevations above 4,500 feet above sea level.
③ Based on U.S. government standard tests.
④ The above wiring specifications are in accordance with National Electrical Code; however, installations must comply with local codes.

Mechanical Specifications

NATURAL GAS MODELS - Central Heating furnace designs are certified to ANSI Z21.47 / CSA 2.3 for both natural and L.P. gas. Limit setting and rating data were established and approved under standard rating conditions using American National Standards Institute standards.

SAFE OPERATION - The Integrated System Control has solid state devices, which continuously monitor for presence of flame, when the system is in the heating mode of operation. Slow opening, dual solenoid combination gas valve and regulator provide extra safety and quieter operation.

QUICK HEATING— Durable, cycle tested, heavy gauge **aluminized steel heat exchanger** quickly transfers heat to provide warm conditioned air to the structure. **Low energy power vent blower,** to increase efficiency and provide discharge of gas fumes to the outside, allows common venting with hot water heater.

BURNERS - Multiport Inshot burners will give years of quiet and efficient service. All models can be converted to **L.P. gas** without changing burners.

INTEGRATED SYSTEM CONTROL - Exclusively designed operational program provides total control of furnace limit sensors, blowers, gas valve, flame control and includes self diagnostics for ease of service.

AIR DELIVERY - The multispeed, direct drive blower motor, with sufficient airflow range for most heating and cooling requirements, will switch from heating to cooling speeds on demand from room thermostat. The blower door safety switch will prevent or terminate furnace operation when the blower door is removed. (Fan relay and 35VA control transformer is standard).

STYLING - Heavy gauge steel and "wrap-around" cabinet construction is used in the cabinet with baked-on enamel finish for strength and beauty. The heat exchanger section of the cabinet is completely lined with foil faced fiberglass insulation. This results in quiet and efficient operation due to the excellent acoustical and insulating qualities of fiberglass.

FEATURES AND GENERAL OPERATION - The High Efficiency Gas Furnaces employs a Silicon Nitride Hot Surface Ignition system, which eliminates the waste of a constant burning pilot. The integrated system control lights the main burners upon a demand for heat from the room thermostat. Complete front service access.

a. Low energy power venter

b. Vent proving pressure switch.

Since the manufacturer has a policy of continuous product and product data improvement, it reserves the right to change specifications and design without notice.

Technical Literature - Printed in U.S.A.

Ingersoll Rand
11819 N. Pennsylvania Street
Carmel, IN 46032

Intertek

Library	Ameristar
Product Section	Furnaces
Product	Furnace
Model	M801
Literature Type	Submittal
Sequence	-
Date	05/15
File No.	M801P100CU48-SUB-1A
Supersedes	M801P100CU48-SUB-1

Ameristar

M801P100CU60-SUB-1A

TAG: _____

SUBMITTAL

Upflow/ Horizontal Induced Draft Single Stage Gas Furnace

M801P100CU60AA

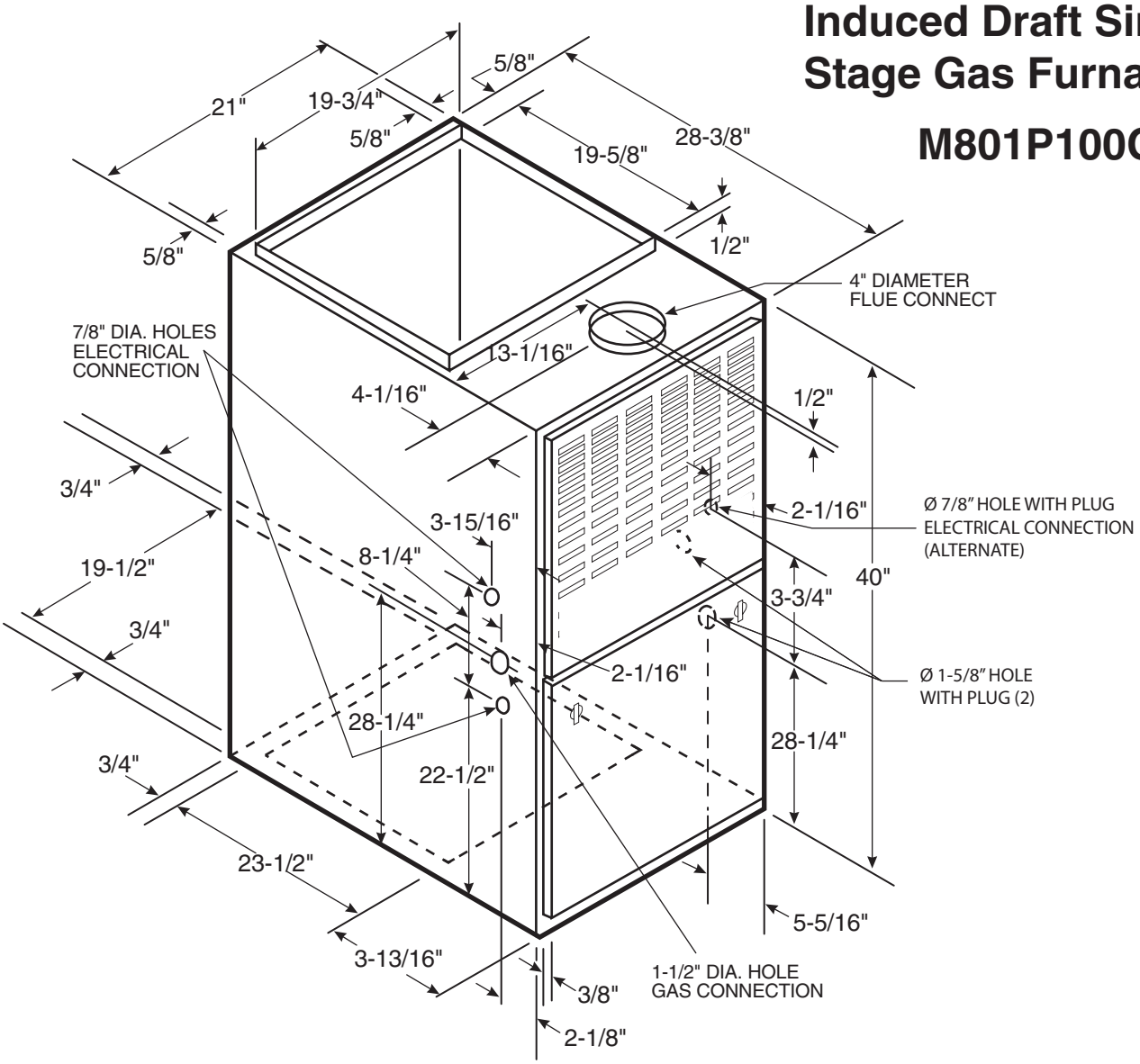

FURNACE AIRFLOW (CFM) VS. EXTERNAL STATIC PRESSURE (IN. W.C.)										
MODEL	**SPEED TAP**	**0.10**	**0.20**	**0.30**	**0.40**	**0.50**	**0.60**	**0.70**	**0.80**	**0.90**
M801P100CU60AA	4-HIGH - Black	2181	2143	2104	2053	2001	1929	1856	1766	1676
	3-MED - HIGH - Blue	1908	1888	1868	1834	1800	1745	1690	1631	1572
	2-MED - LOW - Yellow	1621	1609	1597	1582	1567	1533	1498	1438	1377
	1-LOW - Red	1443	1419	1395	1381	1367	1335	1302	1256	1209

CFM VS. TEMPERATURE RISE														
MODEL	**CFM (CUBIC FEET PER MINUTE)**													
	1100	1200	1300	1400	1500	1600	1700	1800	1900	2000	2100	2200	2300	2400
M801P100CU60AA		62	57	53	49	46	44	41	39	37	35	34	32	31

© 2015 Ingersoll Rand

PRODUCT SPECIFICATIONS ①

MODEL	M801P100CU60AA
TYPE	Upflow / Horizontal
RATINGS ②	
Input BTUH ③	100,000
Capacity BTUH (ICS) ③	79,000
Temp. rise (Min.-Max.) °F.	30 - 60
BLOWER DRIVE	Direct
Diameter - Width (In.)	11 x 10
No. Used	1
Speeds (No.)	4
CFM vs. in. w.g.	See Fan Performance Table
Motor HP	1/2
R.P.M.	1075
Volts / Ph / Hz	115/1/60
COMBUSTION FAN - Type	Centrifugal
Drive - No. Speeds	Direct - 1
Motor HP - RPM	1/50 - 3180
Volts / Ph / Hz	115/1/60
FLA	1.09
FILTER — Furnished?	No
Type Recommended	High Velocity
Hi Vel. (No.-Size-Thk.)	1 - 20x25 - 1 in.
VENT — Size (in.)	4 Round

HEAT EXCHANGER	
Type - Fired	Alum. Steel
- Unfired	
Gauge (Fired)	20
ORIFICES — Main	
Nat. Gas. Qty. — Drill Size	5 — 45
L.P. Gas Qty. — Drill Size	5 — 56
GAS VALVE	Redundant - Single Stage
PILOT SAFETY DEVICE	
Type	Hot Surface Ignition
BURNERS — Type	Multiport Inshot
Number	5
POWER CONN. — V / Ph / Hz ④	115/1/60
Ampacity (In Amps)	13.4
Max. Overcurrent Protection (Amps)	20
PIPE CONN. SIZE (IN.)	1/2
DIMENSIONS	H x W x D
Crated (In.)	41-3/4 x 23 x 30-1/2
WEIGHT	
Shipping (Lbs.) / Net (Lbs.)	162 / 151

① Central Furnace heating designs are certified to ANSI Z21.47 / CSA 2.3.
② For U.S. applications, above input ratings (BTUH) are up to 2,000 feet, derate 4% per 1,000 feet for elevations above 2,000 feet above sea level.
For Canadian applications, above input ratings (BTUH) are up to 4,500 feet, derate 4% per 1,000 feet for elevations above 4,500 feet above sea level.
③ Based on U.S. government standard tests.
④ The above wiring specifications are in accordance with National Electrical Code; however, installations must comply with local codes.

Mechanical Specifications

NATURAL GAS MODELS - Central Heating furnace designs are certified to ANSI Z21.47 / CSA 2.3 for both natural and L.P. gas. Limit setting and rating data were established and approved under standard rating conditions using American National Standards Institute standards.

SAFE OPERATION - The Integrated System Control has solid state devices, which continuously monitor for presence of flame, when the system is in the heating mode of operation. Slow opening, dual solenoid combination gas valve and regulator provide extra safety and quieter operation.

QUICK HEATING— Durable, cycle tested, heavy gauge **aluminized steel heat exchanger** quickly transfers heat to provide warm conditioned air to the structure. **Low energy power vent blower,** to increase efficiency and provide discharge of gas fumes to the outside, allows common venting with hot water heater.

BURNERS - Multiport Inshot burners will give years of quiet and efficient service. All models can be converted to **L.P. gas** without changing burners.

INTEGRATED SYSTEM CONTROL - Exclusively designed operational program provides total control of furnace limit sensors, blowers, gas valve, flame control and includes self diagnostics for ease of service.

AIR DELIVERY - The multispeed, direct drive blower motor, with sufficient airflow range for most heating and cooling requirements, will switch from heating to cooling speeds on demand from room thermostat. The blower door safety switch will prevent or terminate furnace operation when the blower door is removed. (Fan relay and 35VA control transformer is standard).

STYLING - Heavy gauge steel and "wrap-around" cabinet construction is used in the cabinet with baked-on enamel finish for strength and beauty. The heat exchanger section of the cabinet is completely lined with foil faced fiberglass insulation. This results in quiet and efficient operation due to the excellent acoustical and insulating qualities of fiberglass.

FEATURES AND GENERAL OPERATION - The High Efficiency Gas Furnaces employs a Silicon Nitride Hot Surface Ignition system, which eliminates the waste of a constant burning pilot. The integrated system control lights the main burners upon a demand for heat from the room thermostat. Complete front service access.

a. Low energy power venter

b. Vent proving pressure switch.

Since the manufacturer has a policy of continuous product and product data improvement, it reserves the right to change specifications and design without notice.

Technical Literature - Printed in U.S.A.

Ingersoll Rand
11819 N. Pennsylvania Street
Carmel, IN 46032

Intertek

Library	Ameristar
Product Section	Furnaces
Product	Furnace
Model	M801
Literature Type	Submittal
Sequence	-
Date	05/15
File No.	M801P100CU60-SUB-1A
Supersedes	M801P100CU60-SUB-1

Ameristar

M801P120DU60-SUB-1A

TAG: _____

SUBMITTAL

Upflow/ Horizontal Induced Draft Single Stage Gas Furnace

M801P120DU60AA

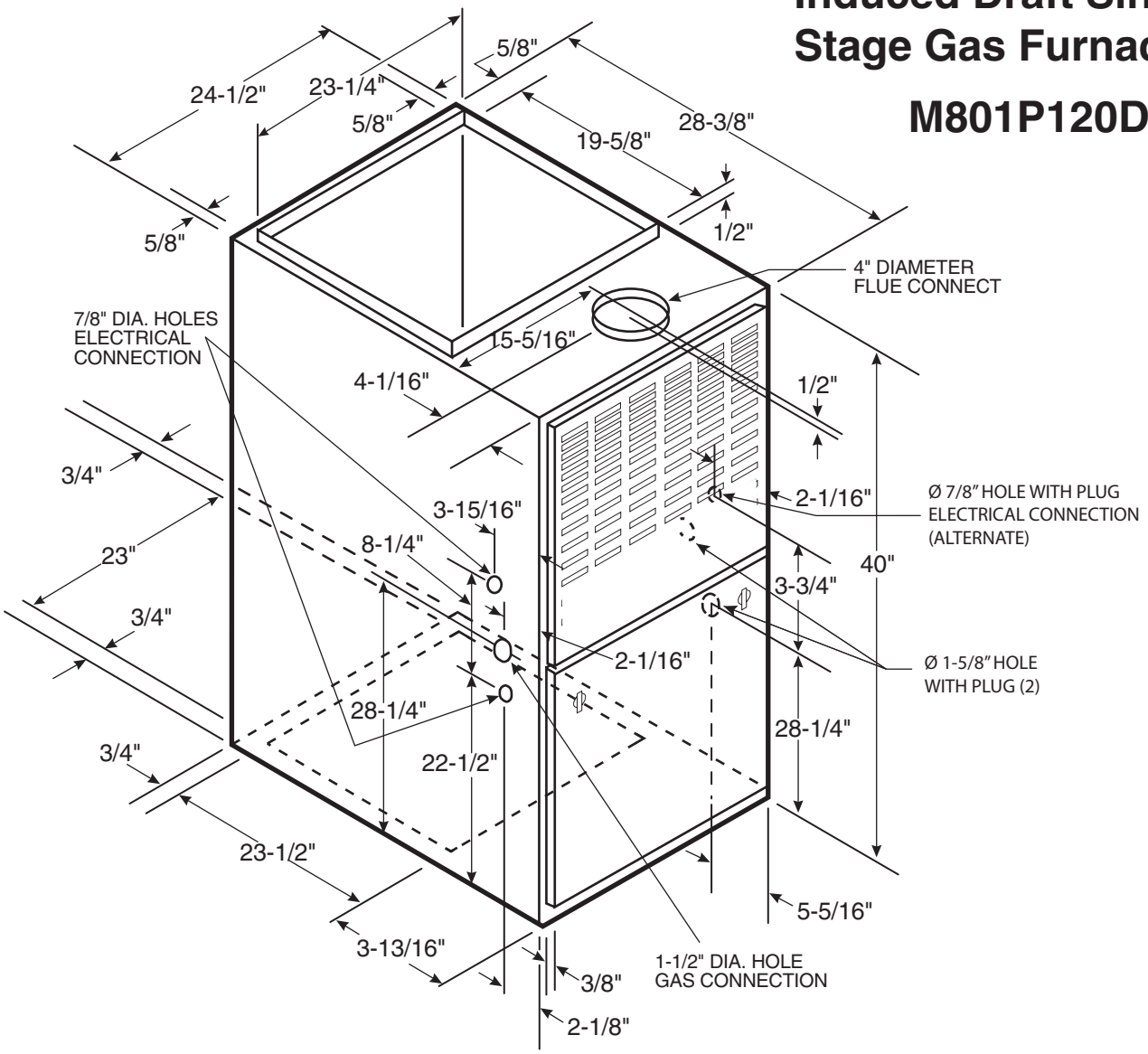

FURNACE AIRFLOW (CFM) VS. EXTERNAL STATIC PRESSURE (IN. W.C.)										
MODEL	**SPEED TAP**	**0.10**	**0.20**	**0.30**	**0.40**	**0.50**	**0.60**	**0.70**	**0.80**	**0.90**
M801P120DU60AA	4-HIGH - Black	2135	2101	2066	2036	2005	1923	1840	1750	1659
	3-MED - HIGH - Blue	1906	1881	1856	1817	1777	1724	1671	1602	1533
	2-MED - LOW - Yellow	1646	1632	1617	1596	1575	1535	1494	1427	1360
	1-LOW - Red	1423	1415	1407	1391	1375	1338	1300	1246	1192

CFM VS. TEMPERATURE RISE												
MODEL	**CFM (CUBIC FEET PER MINUTE)**											
	1300	1400	1500	1600	1700	1800	1900	2000	2100	2200	2300	2400
M801P120DU60AA			59	56	52	49	47	44	42	40		

© 2015 Ingersoll Rand

PRODUCT SPECIFICATIONS ①

MODEL	M801P120DU60AA
TYPE	Upflow / Horizontal
RATINGS ②	
Input BTUH ③	120,000
Capacity BTUH (ICS) ③	96,000
Temp. rise (Min.-Max.) °F.	30 - 60
BLOWER DRIVE	Direct
Diameter - Width (In.)	11 x 10
No. Used	1
Speeds (No.)	4
CFM vs. in. w.g.	See Fan Performance Table
Motor HP	1/2
R.P.M.	1075
Volts / Ph / Hz	115/1/60
COMBUSTION FAN - Type	Centrifugal
Drive - No. Speeds	Direct - 1
Motor HP - RPM	1/50 - 3180
Volts / Ph / Hz	115/1/60
FLA	1.09
FILTER — Furnished?	No
Type Recommended	High Velocity
Hi Vel. (No.-Size-Thk.)	1 - 24x25 - 1 in.
VENT — Size (in.)	4 Round

HEAT EXCHANGER	
Type - Fired	Alum. Steel
- Unfired	
Gauge (Fired)	20
ORIFICES — Main	
Nat. Gas. Qty. — Drill Size	6 — 45
L.P. Gas Qty. — Drill Size	6 — 56
GAS VALVE	Redundant - Single Stage
PILOT SAFETY DEVICE	
Type	Hot Surface Ignition
BURNERS — Type	Multiport Inshot
Number	6
POWER CONN. — V / Ph / Hz ④	115/1/60
Ampacity (In Amps)	13.4
Max. Overcurrent Protection (Amps)	20
PIPE CONN. SIZE (IN.)	1/2
DIMENSIONS	H x W x D
Crated (In.)	41-3/4 x 26-1/2 x 30-1/2
WEIGHT	
Shipping (Lbs.) / Net (Lbs.)	186 / 174

① Central Furnace heating designs are certified to ANSI Z21.47 / CSA 2.3.
② For U.S. applications, above input ratings (BTUH) are up to 2,000 feet, derate 4% per 1,000 feet for elevations above 2,000 feet above sea level.
For Canadian applications, above input ratings (BTUH) are up to 4,500 feet, derate 4% per 1,000 feet for elevations above 4,500 feet above sea level.
③ Based on U.S. government standard tests.
④ The above wiring specifications are in accordance with National Electrical Code; however, installations must comply with local codes.

Mechanical Specifications

NATURAL GAS MODELS - Central Heating furnace designs are certified to ANSI Z21.47 / CSA 2.3 for both natural and L.P. gas. Limit setting and rating data were established and approved under standard rating conditions using American National Standards Institute standards.

SAFE OPERATION - The Integrated System Control has solid state devices, which continuously monitor for presence of flame, when the system is in the heating mode of operation. Slow opening, dual solenoid combination gas valve and regulator provide extra safety and quieter operation.

QUICK HEATING— Durable, cycle tested, heavy gauge **aluminized steel heat exchanger** quickly transfers heat to provide warm conditioned air to the structure. **Low energy power vent blower,** to increase efficiency and provide discharge of gas fumes to the outside, allows common venting with hot water heater.

BURNERS - Multiport Inshot burners will give years of quiet and efficient service. All models can be converted to **L.P. gas** without changing burners.

INTEGRATED SYSTEM CONTROL - Exclusively designed operational program provides total control of furnace limit sensors, blowers, gas valve, flame control and includes self diagnostics for ease of service.

AIR DELIVERY - The multispeed, direct drive blower motor, with sufficient airflow range for most heating and cooling requirements, will switch from heating to cooling speeds on demand from room thermostat. The blower door safety switch will prevent or terminate furnace operation when the blower door is removed. (Fan relay and 35VA control transformer is standard).

STYLING - Heavy gauge steel and "wrap-around" cabinet construction is used in the cabinet with baked-on enamel finish for strength and beauty. The heat exchanger section of the cabinet is completely lined with foil faced fiberglass insulation. This results in quiet and efficient operation due to the excellent acoustical and insulating qualities of fiberglass.

FEATURES AND GENERAL OPERATION - The High Efficiency Gas Furnaces employs a Silicon Nitride Hot Surface Ignition system, which eliminates the waste of a constant burning pilot. The integrated system control lights the main burners upon a demand for heat from the room thermostat. Complete front service access.

a. Low energy power venter

b. Vent proving pressure switch.

Since the manufacturer has a policy of continuous product and product data improvement, it reserves the right to change specifications and design without notice.

Technical Literature - Printed in U.S.A.

Ingersoll Rand
11819 N. Pennsylvania Street
Carmel, IN 46032

Intertek

Library	Ameristar
Product Section	Furnaces
Product	Furnace
Model	M801
Literature Type	Submittal
Sequence	-
Date	05/15
File No.	M801P120DU60-SUB-1A
Supersedes	M801P120DU60-SUB-1

Ameristar

M801P140DU60-SUB-1A

TAG: _____

SUBMITTAL

Upflow/ Horizontal Induced Draft Single Stage Gas Furnace

M801P140DU60AA

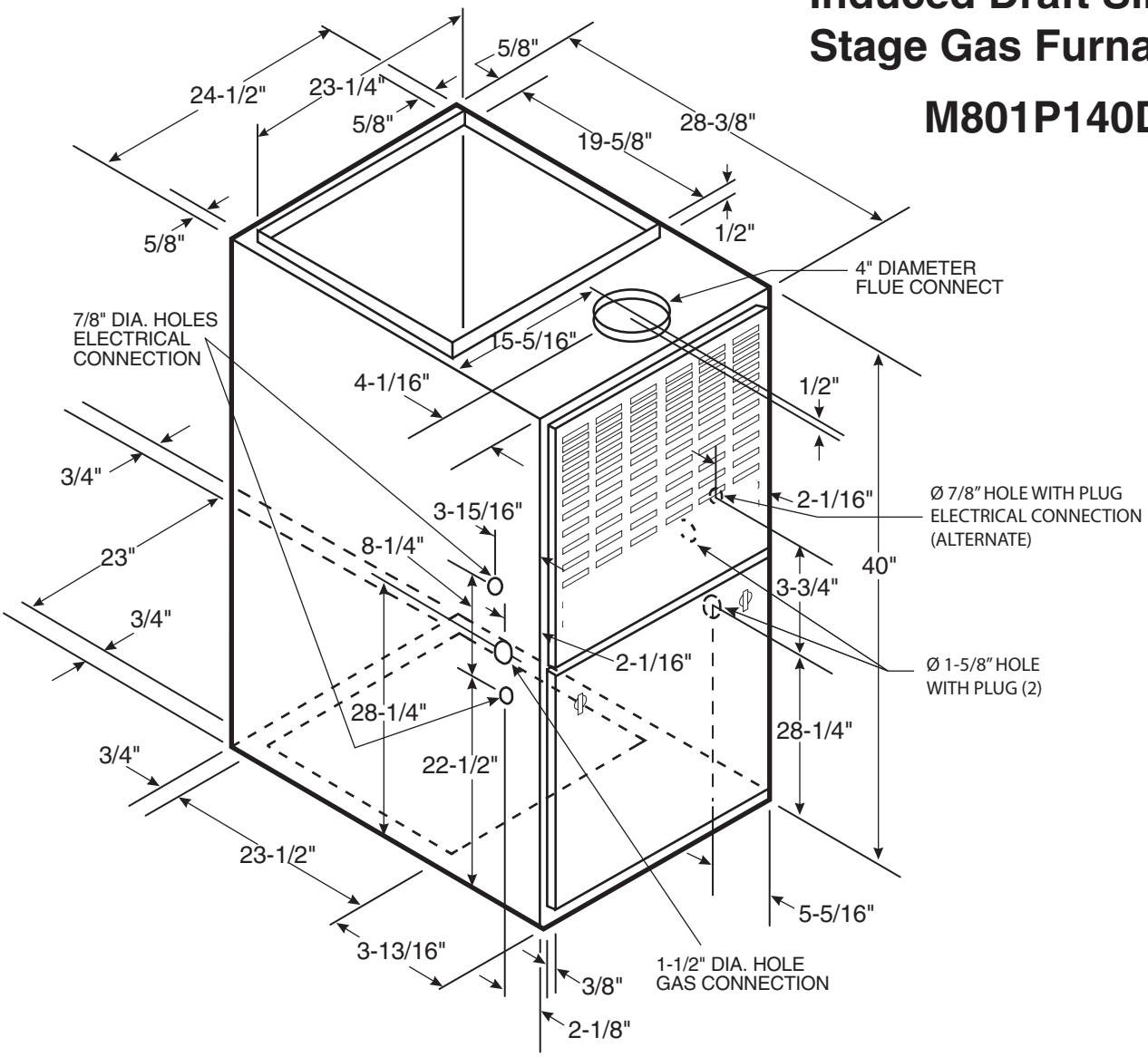

FURNACE AIRFLOW (CFM) VS. EXTERNAL STATIC PRESSURE (IN. W.C.)										
MODEL	**SPEED TAP**	**0.10**	**0.20**	**0.30**	**0.40**	**0.50**	**0.60**	**0.70**	**0.80**	**0.90**
M801P140DU60AA	4-HIGH - Black	2462	2407	2351	2284	2216	2143	2069	1989	1908
	3-MED - HIGH - Blue	2128	2112	2096	2054	2012	1949	1887	1797	1706
	2-MED - LOW - Yellow	1755	1746	1736	1719	1702	1656	1609	1564	1518
	1-LOW - Red	1450	1446	1442	1427	1411	1383	1354	1298	1241

CFM VS. TEMPERATURE RISE													
MODEL	**CFM (CUBIC FEET PER MINUTE)**												
	1200	1300	1400	1500	1600	1700	1800	1900	2000	2100	2200	2300	2400
M801P140DU60AA				69	65	61	58	55	52	49	47	45	

© 2015 Ingersoll Rand

PRODUCT SPECIFICATIONS ①

MODEL	M801P140DU60AA
TYPE	Upflow / Horizontal
RATINGS ②	
Input BTUH ③	140,000
Capacity BTUH (ICS) ③	111,000
Temp. rise (Min.-Max.) °F.	40 - 70
BLOWER DRIVE	Direct
Diameter - Width (In.)	11 x 10
No. Used	1
Speeds (No.)	4
CFM vs. in. w.g.	See Fan Performance Table
Motor HP	3/4
R.P.M.	1075
Volts / Ph / Hz	115/1/60
COMBUSTION FAN - Type	Centrifugal
Drive - No. Speeds	Direct - 1
Motor HP - RPM	1/50 - 3180
Volts / Ph / Hz	115/1/60
FLA	1.09
FILTER — Furnished?	No
Type Recommended	High Velocity
Hi Vel. (No.-Size-Thk.)	1 - 24x25 - 1 in.
VENT — Size (in.)	4 Round

HEAT EXCHANGER	
Type - Fired	Alum. Steel
- Unfired	
Gauge (Fired)	20
ORIFICES — Main	
Nat. Gas. Qty. — Drill Size	7 — 45
L.P. Gas Qty. — Drill Size	7 — 56
GAS VALVE	Redundant - Single Stage
PILOT SAFETY DEVICE	
Type	Hot Surface Ignition
BURNERS — Type	Multiport Inshot
Number	7
POWER CONN. — V / Ph / Hz ④	115/1/60
Ampacity (In Amps)	13.8
Max. Overcurrent Protection (Amps)	20
PIPE CONN. SIZE (IN.)	1/2
DIMENSIONS	H x W x D
Crated (In.)	41-3/4 x 26-1/2 x 30-1/2
WEIGHT	
Shipping (Lbs.) / Net (Lbs.)	193 / 181

① Central Furnace heating designs are certified to ANSI Z21.47 / CSA 2.3.
② For U.S. applications, above input ratings (BTUH) are up to 2,000 feet, derate 4% per 1,000 feet for elevations above 2,000 feet above sea level.
For Canadian applications, above input ratings (BTUH) are up to 4,500 feet, derate 4% per 1,000 feet for elevations above 4,500 feet above sea level.
③ Based on U.S. government standard tests.
④ The above wiring specifications are in accordance with National Electrical Code; however, installations must comply with local codes.

Mechanical Specifications

NATURAL GAS MODELS - Central Heating furnace designs are certified to ANSI Z21.47 / CSA 2.3 for both natural and L.P. gas. Limit setting and rating data were established and approved under standard rating conditions using American National Standards Institute standards.

SAFE OPERATION - The Integrated System Control has solid state devices, which continuously monitor for presence of flame, when the system is in the heating mode of operation. Slow opening, dual solenoid combination gas valve and regulator provide extra safety and quieter operation.

QUICK HEATING— Durable, cycle tested, heavy gauge **aluminized steel heat exchanger** quickly transfers heat to provide warm conditioned air to the structure. **Low energy power vent blower,** to increase efficiency and provide discharge of gas fumes to the outside, allows common venting with hot water heater.

BURNERS - Multiport Inshot burners will give years of quiet and efficient service. All models can be converted to **L.P. gas** without changing burners.

INTEGRATED SYSTEM CONTROL - Exclusively designed operational program provides total control of furnace limit sensors, blowers, gas valve, flame control and includes self diagnostics for ease of service.

AIR DELIVERY - The multispeed, direct drive blower motor, with sufficient airflow range for most heating and cooling requirements, will switch from heating to cooling speeds on demand from room thermostat. The blower door safety switch will prevent or terminate furnace operation when the blower door is removed. (Fan relay and 35VA control transformer is standard).

STYLING - Heavy gauge steel and "wrap-around" cabinet construction is used in the cabinet with baked-on enamel finish for strength and beauty. The heat exchanger section of the cabinet is completely lined with foil faced fiberglass insulation. This results in quiet and efficient operation due to the excellent acoustical and insulating qualities of fiberglass.

FEATURES AND GENERAL OPERATION - The High Efficiency Gas Furnaces employs a Silicon Nitride Hot Surface Ignition system, which eliminates the waste of a constant burning pilot. The integrated system control lights the main burners upon a demand for heat from the room thermostat. Complete front service access.

a. Low energy power venter

b. Vent proving pressure switch.

Since the manufacturer has a policy of continuous product and product data improvement, it reserves the right to change specifications and design without notice.

Technical Literature - Printed in U.S.A.

Ingersoll Rand
11819 N. Pennsylvania Street
Carmel, IN 46032

Intertek

Library	Ameristar
Product Section	Furnaces
Product	Furnace
Model	M801
Literature Type	Submittal
Sequence	-
Date	05/15
File No.	M801P140DU60-SUB-1A
Supersedes	M801P140DU60-SUB-1

Ameristar

M801P040AD24-SUB-1A

TAG: _____

SUBMITTAL

Downflow/ Horizontal Induced Draft Single Stage Gas Furnace

M801P040AD24AA

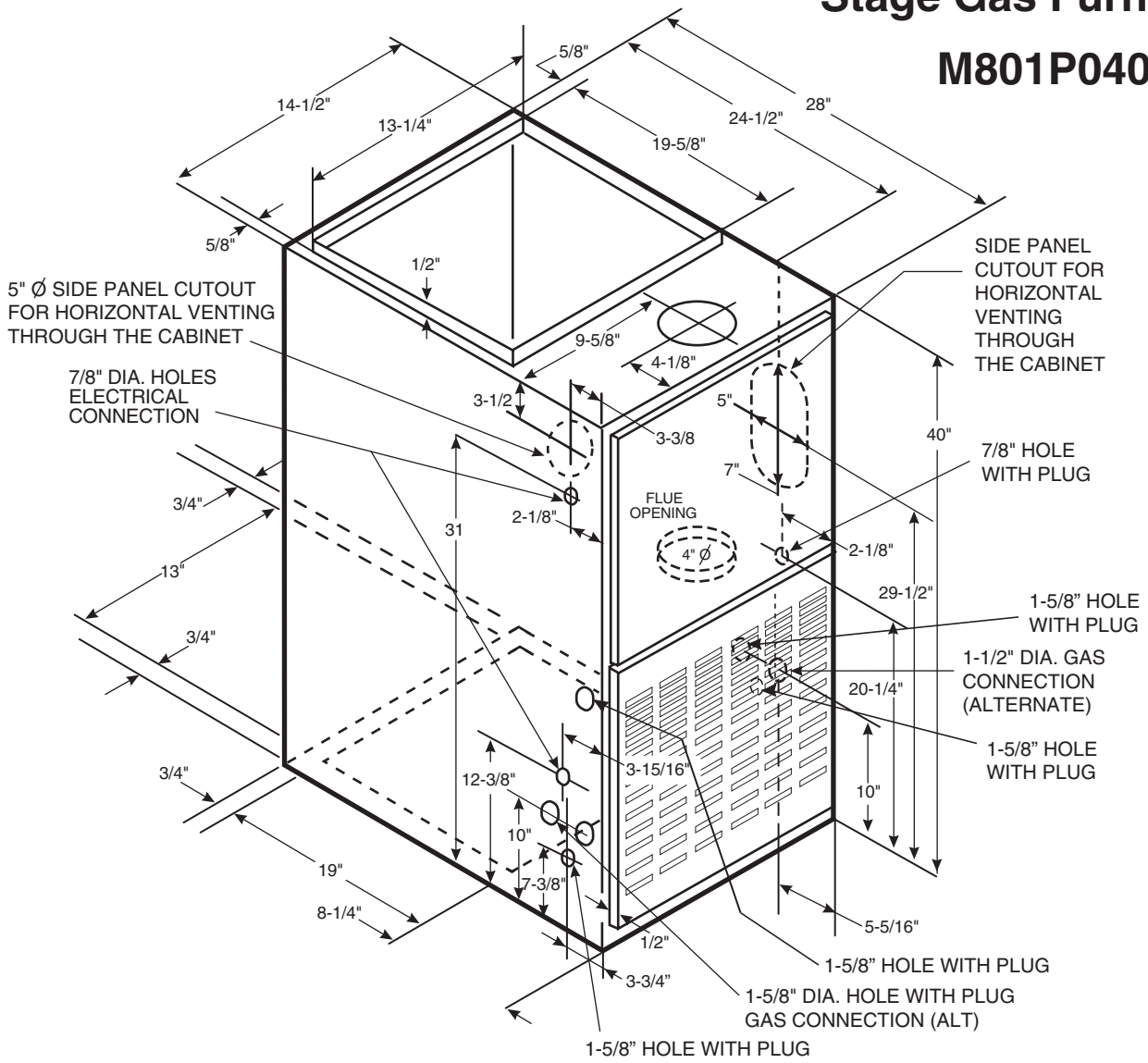

FURNACE AIRFLOW (CFM) VS. STATIC PRESSURE (ins. w.g.)										
MODEL	**SPEED TAP**	**0.10**	**0.20**	**0.30**	**0.40**	**0.50**	**0.60**	**0.70**	**0.80**	**0.90**
M801P040AD24AA	4-HIGH - Black	1070	1033	1000	960	920	860	810	740	-
	3-MED - HIGH - Blue	870	850	823	790	753	813	667	613	490
	2-MED - LOW - Yellow	740	720	690	663	627	588	547	483	-
	1-LOW - Red	633	600	577	543	507	463	420	360	-

CFM VS. TEMPERATURE RISE									
MODEL	**CFM (CUBIC FEET PER MINUTE)**								
	500	600	700	800	900	1000	1100	1200	1300
M801P040AD24AA	59	49	42	37	33				

© 2012 Ingersoll Rand

PRODUCT SPECIFICATIONS ①

MODEL	M801P040AD24AA
TYPE	Downflow / Horizontal
RATINGS ②	
Input BTUH ③	40,000
Capacity BTUH (ICS) ③	31,000
Temp. rise (Min.-Max.) °F.	30 - 60
BLOWER DRIVE	DIRECT
Diameter - Width (In.)	10 x 6
No. Used	1
Speeds (No.)	4
CFM vs. in. w.g.	See Fan Performance Table
Motor HP	1/5
R.P.M.	1075
Volts / Ph / Hz	115/1/60
COMBUSTION FAN - Type	Centrifugal
Drive - No. Speeds	Direct - 1
Motor HP - RPM	1/50 - 3180
Volts / Ph / Hz	115/1/60
FLA	1.09
FILTER — Furnished?	No
Type Recommended	High Velocity
Hi Vel. (No.-Size-Thk.)	2 - 14x20 - 1in.
VENT — Size (in.)	4 Round

HEAT EXCHANGER	
Type - Fired	Alum. Steel
- Unfired	
Gauge (Fired)	20
ORIFICES — Main	
Nat. Gas. Qty. — Drill Size	2 — 45
L.P. Gas Qty. — Drill Size	2 — 56
GAS VALVE	Redundant - Single Stage
PILOT SAFETY DEVICE	
Type	Hot Surface Ignition
BURNERS — Type	Multiport Inshot
Number	2
POWER CONN. — V / Ph / Hz ④	115/1/60
Ampacity (In Amps)	5.4
Max. Overcurrent Protection (Amps)	15
PIPE CONN. SIZE (IN.)	1/2
DIMENSIONS	H x W x D
Crated (In.)	41-3/4 x 16-1/2 x 30-1/2
WEIGHT	
Shipping (Lbs.) / Net (Lbs.)	119 / 109

① Central Furnace heating designs are certified to ANSI Z21.47 / CSA 2.3.
② For U.S. applications, above input ratings (BTUH) are up to 2,000 feet, derate 4% per 1,000 feet for elevations above 2,000 feet above sea level.
For Canadian applications, above input ratings (BTUH) are up to 4,500 feet, derate 4% per 1,000 feet for elevations above 4,500 feet above sea level.
③ Based on U.S. government standard tests.
④ The above wiring specifications are in accordance with National Electrical Code; however, installations must comply with local codes.

Mechanical Specifications

NATURAL GAS MODELS - Central Heating furnace designs are certified to ANSI Z21.47 / CSA 2.3 for both natural and L.P. gas. Limit setting and rating data were established and approved under standard rating conditions using American National Standards Institute standards.

SAFE OPERATION - The Integrated System Control has solid state devices, which continuously monitor for presence of flame, when the system is in the heating mode of operation. Slow opening, dual solenoid combination gas valve and regulator provide extra safety and quieter operation.

QUICK HEATING— Durable, cycle tested, heavy gauge **aluminized steel heat exchanger** quickly transfers heat to provide warm conditioned air to the structure. **Low energy power vent blower,** to increase efficiency and provide discharge of gas fumes to the outside, allows common venting with hot water heater.

BURNERS - Multiport Inshot burners will give years of quiet and efficient service. All models can be converted to **L.P. gas** without changing burners.

INTEGRATED SYSTEM CONTROL - Exclusively designed operational program provides total control of furnace limit sensors, blowers, gas valve, flame control and includes self diagnostics for ease of service.

AIR DELIVERY - The multispeed, direct drive blower motor, with sufficient airflow range for most heating and cooling requirements, will switch from heating to cooling speeds on demand from room thermostat. The blower door safety switch will prevent or terminate furnace operation when the blower door is removed. (Fan relay and 35VA control transformer is standard).

STYLING - Heavy gauge steel and "wrap-around" cabinet construction is used in the cabinet with baked-on enamel finish for strength and beauty. The heat exchanger section of the cabinet is completely lined with foil faced fiberglass insulation. This results in quiet and efficient operation due to the excellent acoustical and insulating qualities of fiberglass.

FEATURES AND GENERAL OPERATION - The High Efficiency Gas Furnaces employs a Silicon Nitride Hot Surface Ignition system, which eliminates the waste of a constant burning pilot. The integrated system control lights the main burners upon a demand for heat from the room thermostat. Complete front service access.

a. Low energy power venter

b. Vent proving pressure switch.

Since the manufacturer has a policy of continuous product and product data improvement, it reserves the right to change specifications and design without notice.

Technical Literature - Printed in U.S.A.

Ingersoll Rand
11819 N. Pennsylvania Street
Carmel, IN 46032

Intertek

Library	Ameristar
Product Section	Furnaces
Product	Furnace
Model	M801
Literature Type	Submittal
Sequence	-
Date	05/15
File No.	M801P040AD24-SUB-1A
Supersedes	M801P040AD24-SUB-1

Ameristar

M801P060AD24-SUB-1A

TAG: _____

SUBMITTAL

Downflow/ Horizontal Induced Draft Single Stage Gas Furnace

M801P060AD24AA

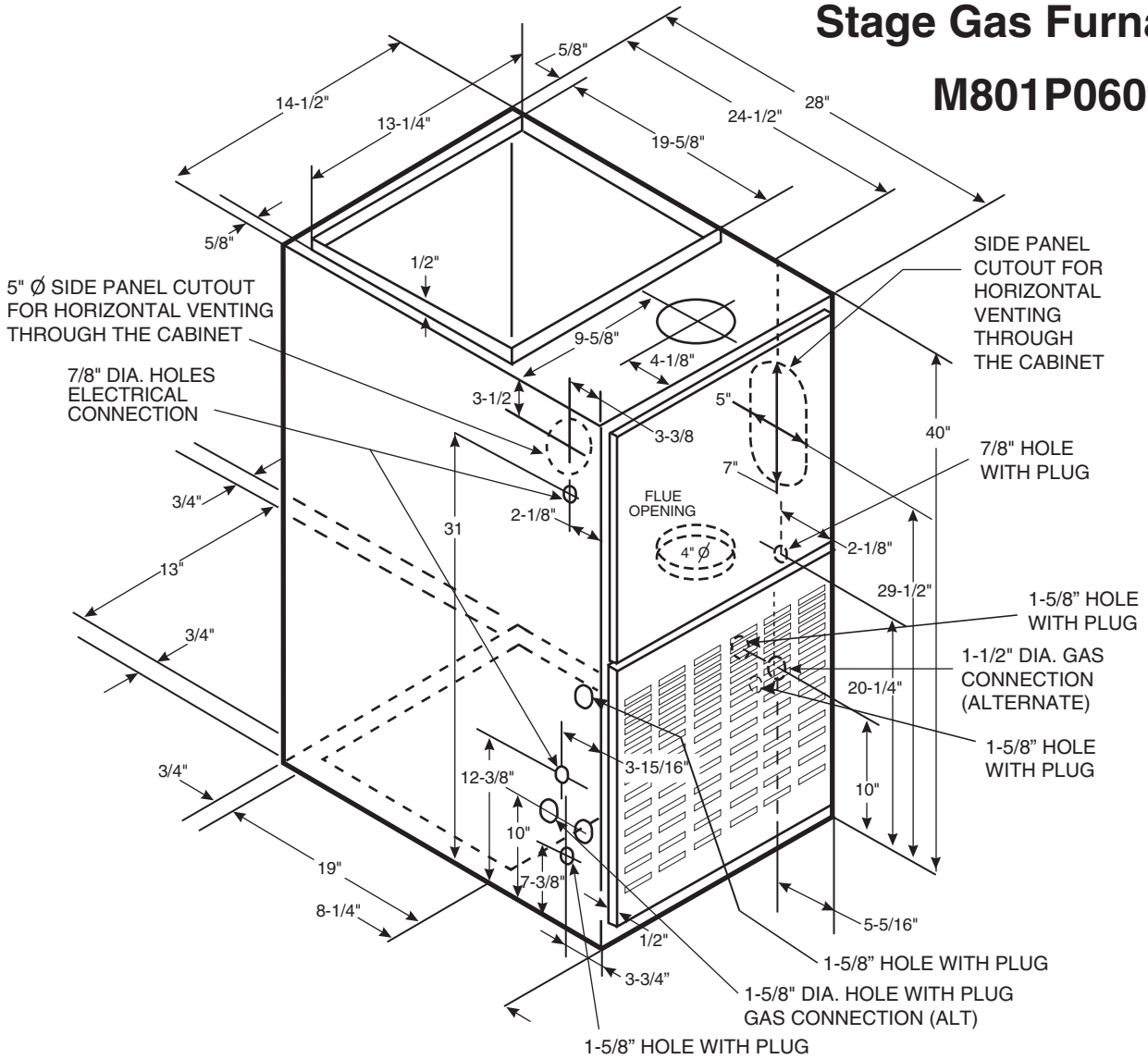

FURNACE AIRFLOW (CFM) VS. STATIC PRESSURE (ins. w.g.)										
MODEL	**SPEED TAP**	**0.10**	**0.20**	**0.30**	**0.40**	**0.50**	**0.60**	**0.70**	**0.80**	**0.90**
M801P060AD24AA	4-HIGH - Black	1200	1155	1111	1056	1001	924	848	774	701
	3-MED - HIGH - Blue	1025	988	951	905	859	797	735	646	558
	2-MED - LOW - Yellow	838	808	779	742	704	646	588	502	415
	1-LOW - Red	722	689	656	618	579	528	478	376	275

CFM VS. TEMPERATURE RISE										
MODEL	**CFM (CUBIC FEET PER MINUTE)**									
	500	600	700	800	900	1000	1100	1200	1300	1400
M801P060AD24AA			63	56	49	44	40			

© 2012 Ingersoll Rand

PRODUCT SPECIFICATIONS ①

MODEL	M801P060AD24AA
TYPE	Downflow / Horizontal
RATINGS ②	
Input BTUH ③	60,000
Capacity BTUH (ICS) ③	48,000
Temp. rise (Min.-Max.) °F.	35 - 65
BLOWER DRIVE	DIRECT
Diameter - Width (In.)	10 x 7
No. Used	1
Speeds (No.)	4
CFM vs. in. w.g.	See Fan Performance Table
Motor HP	1/5
R.P.M.	1075
Volts / Ph / Hz	115/1/60
COMBUSTION FAN - Type	Centrifugal
Drive - No. Speeds	Direct - 1
Motor HP - RPM	1/50 - 3180
Volts / Ph / Hz	115/1/60
FLA	1.09
FILTER — Furnished?	No
Type Recommended	High Velocity
Hi Vel. (No.-Size-Thk.)	2 - 14x20 - 1in.
VENT — Size (in.)	4 Round

HEAT EXCHANGER	
Type - Fired	Alum. Steel
- Unfired	
Gauge (Fired)	20
ORIFICES — Main	
Nat. Gas. Qty. — Drill Size	3 — 45
L.P. Gas Qty. — Drill Size	3 — 56
GAS VALVE	Redundant - Single Stage
PILOT SAFETY DEVICE	
Type	Hot Surface Ignition
BURNERS — Type	Multiport Inshot
Number	3
POWER CONN. — V / Ph / Hz ④	115/1/60
Ampacity (In Amps)	5.5
Max. Overcurrent Protection (Amps)	15
PIPE CONN. SIZE (IN.)	1/2
DIMENSIONS	H x W x D
Crated (In.)	41-3/4 x 16-1/2 x 30-1/2
WEIGHT	
Shipping (Lbs.) / Net (Lbs.)	129 / 119

① Central Furnace heating designs are certified to ANSI Z21.47 / CSA 2.3.
② For U.S. applications, above input ratings (BTUH) are up to 2,000 feet, derate 4% per 1,000 feet for elevations above 2,000 feet above sea level.
For Canadian applications, above input ratings (BTUH) are up to 4,500 feet, derate 4% per 1,000 feet for elevations above 4,500 feet above sea level.
③ Based on U.S. government standard tests.
④ The above wiring specifications are in accordance with National Electrical Code; however, installations must comply with local codes.

Mechanical Specifications

NATURAL GAS MODELS - Central Heating furnace designs are certified to ANSI Z21.47 / CSA 2.3 for both natural and L.P. gas. Limit setting and rating data were established and approved under standard rating conditions using American National Standards Institute standards.

SAFE OPERATION - The Integrated System Control has solid state devices, which continuously monitor for presence of flame, when the system is in the heating mode of operation. Slow opening, dual solenoid combination gas valve and regulator provide extra safety and quieter operation.

QUICK HEATING— Durable, cycle tested, heavy gauge **aluminized steel heat exchanger** quickly transfers heat to provide warm conditioned air to the structure. **Low energy power vent blower,** to increase efficiency and provide discharge of gas fumes to the outside, allows common venting with hot water heater.

BURNERS - Multiport Inshot burners will give years of quiet and efficient service. All models can be converted to **L.P. gas** without changing burners.

INTEGRATED SYSTEM CONTROL - Exclusively designed operational program provides total control of furnace limit sensors, blowers, gas valve, flame control and includes self diagnostics for ease of service.

AIR DELIVERY - The multispeed, direct drive blower motor, with sufficient airflow range for most heating and cooling requirements, will switch from heating to cooling speeds on demand from room thermostat. The blower door safety switch will prevent or terminate furnace operation when the blower door is removed. (Fan relay and 35VA control transformer is standard).

STYLING - Heavy gauge steel and "wrap-around" cabinet construction is used in the cabinet with baked-on enamel finish for strength and beauty. The heat exchanger section of the cabinet is completely lined with foil faced fiberglass insulation. This results in quiet and efficient operation due to the excellent acoustical and insulating qualities of fiberglass.

FEATURES AND GENERAL OPERATION - The High Efficiency Gas Furnaces employs a Silicon Nitride Hot Surface Ignition system, which eliminates the waste of a constant burning pilot. The integrated system control lights the main burners upon a demand for heat from the room thermostat. Complete front service access.

a. Low energy power venter

b. Vent proving pressure switch.

Since the manufacturer has a policy of continuous product and product data improvement, it reserves the right to change specifications and design without notice.

Technical Literature - Printed in U.S.A.

Ingersoll Rand
11819 N. Pennsylvania Street
Carmel, IN 46032

Intertek

Library	Ameristar
Product Section	Furnaces
Product	Furnace
Model	M801
Literature Type	Submittal
Sequence	-
Date	05/15
File No.	M801P060AD24-SUB-1A
Supersedes	M801P060AD24-SUB-1

Ameristar

M801P060AD36-SUB-1A

TAG: _____

SUBMITTAL

Downflow/ Horizontal Induced Draft Single Stage Gas Furnace

M801P060AD36AA

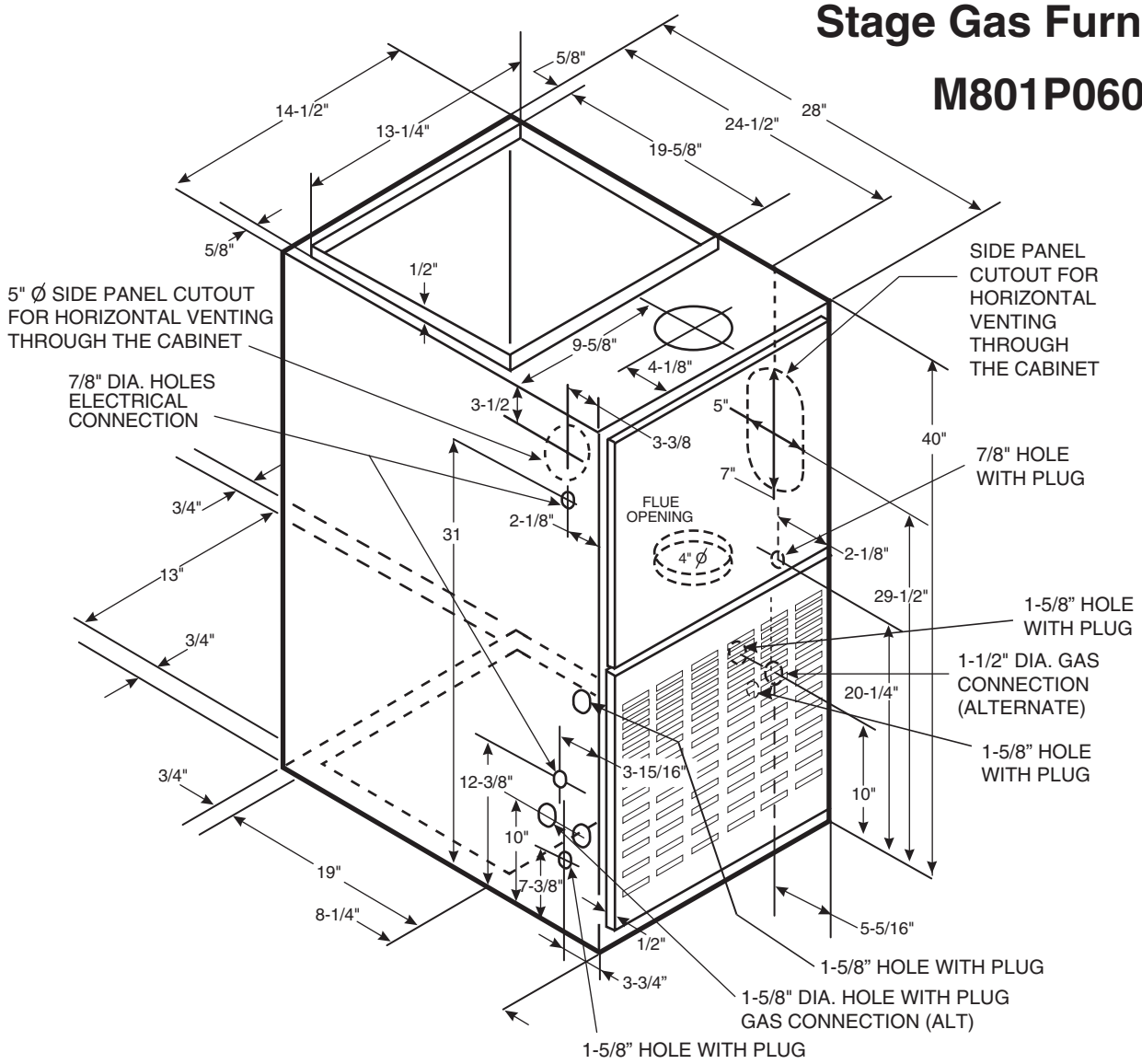

FURNACE AIRFLOW (CFM) VS. STATIC PRESSURE (ins. w.g.)										
MODEL	**SPEED TAP**	**0.10**	**0.20**	**0.30**	**0.40**	**0.50**	**0.60**	**0.70**	**0.80**	**0.90**
M801P060AD36AA	4-HIGH - Black	1480	1429	1375	1318	1282	1100	1112	1029	959
	3-MED - HIGH - Blue	1302	1276	1229	1188	1141	1088	1024	953	882
	2-MED - LOW - Yellow	1115	1100	1070	1035	1000	965	918	859	790
	1-LOW - Red	956	947	918	888	859	824	788	741	682

CFM VS. TEMPERATURE RISE													
MODEL	CFM (CUBIC FEET PER MINUTE)												
	500	600	700	800	900	1000	1100	1200	1300	1400	1500	1600	1700
M801P060AD36AA				56	49	44	40	37	34	32			

© 2012 Ingersoll Rand

PRODUCT SPECIFICATIONS ①

MODEL	M801P060AD36AA
TYPE	Downflow / Horizontal
RATINGS ②	
Input BTUH ③	60,000
Capacity BTUH (ICS) ③	48,000
Temp. rise (Min.-Max.) °F.	30 - 60
BLOWER DRIVE	DIRECT
Diameter - Width (In.)	11 x 7
No. Used	1
Speeds (No.)	4
CFM vs. in. w.g.	See Fan Performance Table
Motor HP	1/2
R.P.M.	1075
Volts / Ph / Hz	115/1/60
COMBUSTION FAN - Type	Centrifugal
Drive - No. Speeds	Direct - 1
Motor HP - RPM	1/50 - 3180
Volts / Ph / Hz	115/1/60
FLA	1.09
FILTER — Furnished?	No
Type Recommended	High Velocity
Hi Vel. (No.-Size-Thk.)	2 - 14x20 - 1in.
VENT — Size (in.)	4 Round

HEAT EXCHANGER	
Type - Fired	Alum. Steel
- Unfired	
Gauge (Fired)	20
ORIFICES — Main	
Nat. Gas. Qty. — Drill Size	3 — 45
L.P. Gas Qty. — Drill Size	3 — 56
GAS VALVE	Redundant - Single Stage
PILOT SAFETY DEVICE	
Type	Hot Surface Ignition
BURNERS — Type	Multiport Inshot
Number	3
POWER CONN. — V / Ph / Hz ④	115/1/60
Ampacity (In Amps)	11.6
Max. Overcurrent Protection (Amps)	15
PIPE CONN. SIZE (IN.)	1/2
DIMENSIONS	H x W x D
Crated (In.)	41-3/4 x 16-1/2 x 30-1/2
WEIGHT	
Shipping (Lbs.) / Net (Lbs.)	129 / 119

① Central Furnace heating designs are certified to ANSI Z21.47 / CSA 2.3.
② For U.S. applications, above input ratings (BTUH) are up to 2,000 feet, derate 4% per 1,000 feet for elevations above 2,000 feet above sea level.
For Canadian applications, above input ratings (BTUH) are up to 4,500 feet, derate 4% per 1,000 feet for elevations above 4,500 feet above sea level.
③ Based on U.S. government standard tests.
④ The above wiring specifications are in accordance with National Electrical Code; however, installations must comply with local codes.

Mechanical Specifications

NATURAL GAS MODELS - Central Heating furnace designs are certified to ANSI Z21.47 / CSA 2.3 for both natural and L.P. gas. Limit setting and rating data were established and approved under standard rating conditions using American National Standards Institute standards.

SAFE OPERATION - The Integrated System Control has solid state devices, which continuously monitor for presence of flame, when the system is in the heating mode of operation. Slow opening, dual solenoid combination gas valve and regulator provide extra safety and quieter operation.

QUICK HEATING— Durable, cycle tested, heavy gauge **aluminized steel heat exchanger** quickly transfers heat to provide warm conditioned air to the structure. **Low energy power vent blower,** to increase efficiency and provide discharge of gas fumes to the outside, allows common venting with hot water heater.

BURNERS - Multiport Inshot burners will give years of quiet and efficient service. All models can be converted to **L.P. gas** without changing burners.

INTEGRATED SYSTEM CONTROL - Exclusively designed operational program provides total control of furnace limit sensors, blowers, gas valve, flame control and includes self diagnostics for ease of service.

AIR DELIVERY - The multispeed, direct drive blower motor, with sufficient airflow range for most heating and cooling requirements, will switch from heating to cooling speeds on demand from room thermostat. The blower door safety switch will prevent or terminate furnace operation when the blower door is removed. (Fan relay and 35VA control transformer is standard).

STYLING - Heavy gauge steel and "wrap-around" cabinet construction is used in the cabinet with baked-on enamel finish for strength and beauty. The heat exchanger section of the cabinet is completely lined with foil faced fiberglass insulation. This results in quiet and efficient operation due to the excellent acoustical and insulating qualities of fiberglass.

FEATURES AND GENERAL OPERATION - The High Efficiency Gas Furnaces employs a Silicon Nitride Hot Surface Ignition system, which eliminates the waste of a constant burning pilot. The integrated system control lights the main burners upon a demand for heat from the room thermostat. Complete front service access.

a. Low energy power venter

b. Vent proving pressure switch.

Since the manufacturer has a policy of continuous product and product data improvement, it reserves the right to change specifications and design without notice.

Technical Literature - Printed in U.S.A.

Ingersoll Rand
11819 N. Pennsylvania Street
Carmel, IN 46032

Intertek

Library	Ameristar
Product Section	Furnaces
Product	Furnace
Model	M801
Literature Type	Submittal
Sequence	-
Date	05/15
File No.	M801P060AD36-SUB-1A
Supersedes	M801P060AD36-SUB-1

Ameristar

M801P080BD45-SUB-1A

TAG: _____

SUBMITTAL

Downflow/ Horizontal Induced Draft Single Stage Gas Furnace

M801P080BD45AA

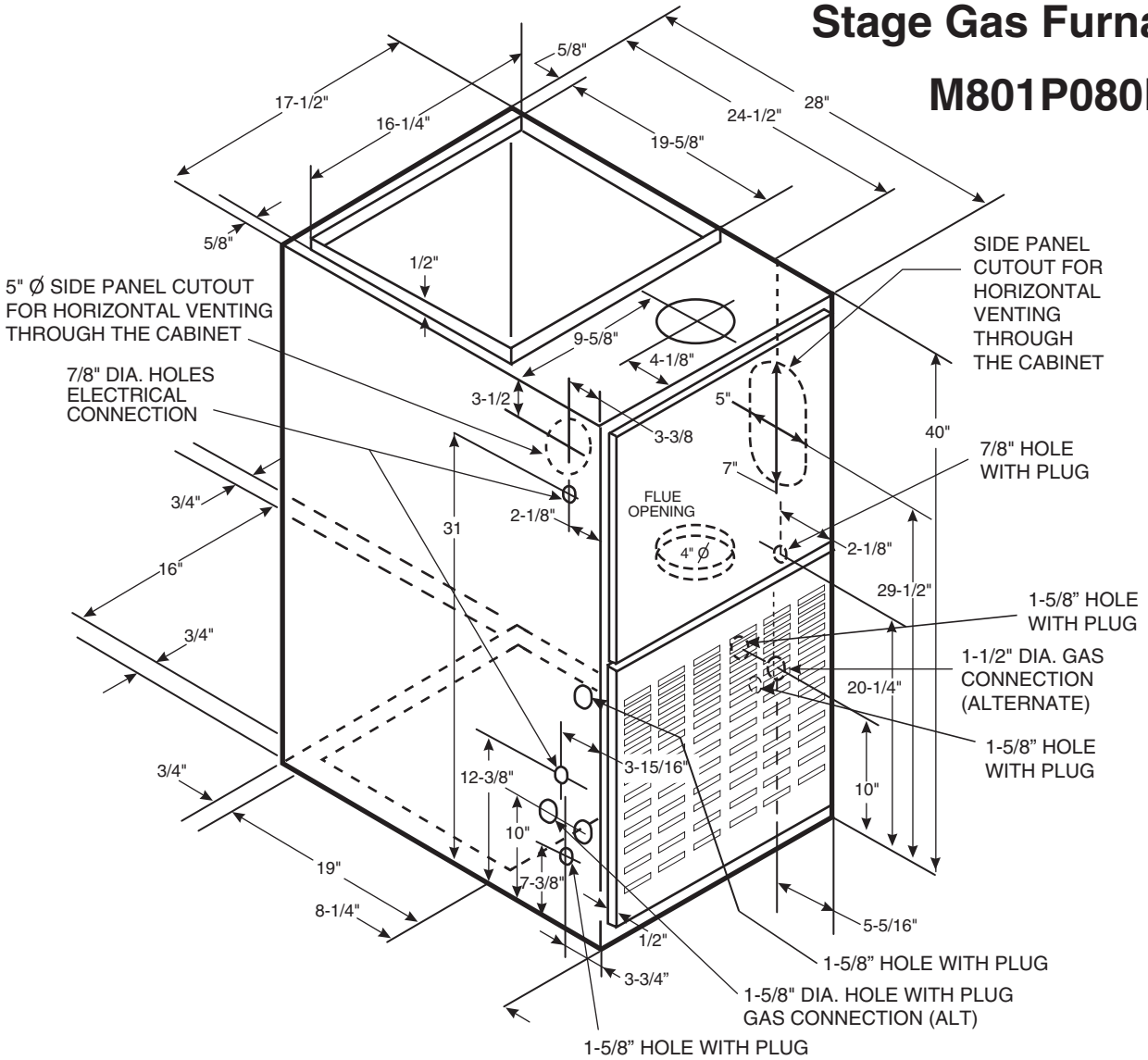

FURNACE AIRFLOW (CFM) VS. STATIC PRESSURE (ins. w.g.)										
MODEL	**SPEED TAP**	**0.10**	**0.20**	**0.30**	**0.40**	**0.50**	**0.60**	**0.70**	**0.80**	**0.90**
M801P080BD45AA	4-HIGH - Black	1798	1750	1692	1642	1575	1500	1425	1325	1225
	3-MED - HIGH - Blue	1384	1367	1333	1300	1275	1233	1192	1142	1083
	2-MED - LOW - Yellow	1210	1150	1108	1075	1042	1008	967	925	867
	1-LOW - Red	1005	970	808	775	767	733	700	675	617

CFM VS. TEMPERATURE RISE												
MODEL	**CFM (CUBIC FEET PER MINUTE)**											
	500	600	700	800	900	1000	1100	1200	1300	1400	1500	1600
M801P080BD45AA					64	57	52	48	44	41		

© 2012 Ingersoll Rand

PRODUCT SPECIFICATIONS ①

MODEL	M801P080BD45AA
TYPE	Downflow / Horizontal
RATINGS ②	
Input BTUH ③	80,000
Capacity BTUH (ICS) ③	64,000
Temp. rise (Min.-Max.) °F.	35 - 65
BLOWER DRIVE	DIRECT
Diameter - Width (In.)	10 x 8
No. Used	1
Speeds (No.)	4
CFM vs. in. w.g.	See Fan Performance Table
Motor HP	1/3
R.P.M.	1075
Volts / Ph / Hz	115/1/60
COMBUSTION FAN - Type	Centrifugal
Drive - No. Speeds	Direct - 1
Motor HP - RPM	1/50 - 3180
Volts / Ph / Hz	115/1/60
FLA	1.09
FILTER — Furnished?	No
Type Recommended	High Velocity
Hi Vel. (No.-Size-Thk.)	2 - 14x20 - 1 in.
VENT — Size (in.)	4 Round

HEAT EXCHANGER	
Type - Fired	Alum. Steel - Type I
- Unfired	
Gauge (Fired)	20
ORIFICES — Main	
Nat. Gas. Qty. — Drill Size	4 — 45
L.P. Gas Qty. — Drill Size	4 — 56
GAS VALVE	Redundant - Single Stage
PILOT SAFETY DEVICE	
Type	Hot Surface Ignition
BURNERS — Type	Multiport Inshot
Number	4
POWER CONN. — V / Ph / Hz ④	115/1/60
Ampacity (In Amps)	9.1
Max. Overcurrent Protection (Amps)	15
PIPE CONN. SIZE (IN.)	1/2
DIMENSIONS	H x W x D
Crated (In.)	41-3/4 x 19-1/2 x 30-1/2
WEIGHT	
Shipping (Lbs.) / Net (Lbs.)	146 / 135

① Central Furnace heating designs are certified to ANSI Z21.47 / CSA 2.3.
② For U.S. applications, above input ratings (BTUH) are up to 2,000 feet, derate 4% per 1,000 feet for elevations above 2,000 feet above sea level.
For Canadian applications, above input ratings (BTUH) are up to 4,500 feet, derate 4% per 1,000 feet for elevations above 4,500 feet above sea level.
③ Based on U.S. government standard tests.
④ The above wiring specifications are in accordance with National Electrical Code; however, installations must comply with local codes.

Mechanical Specifications

NATURAL GAS MODELS - Central Heating furnace designs are certified to ANSI Z21.47 / CSA 2.3 for both natural and L.P. gas. Limit setting and rating data were established and approved under standard rating conditions using American National Standards Institute standards.

SAFE OPERATION - The Integrated System Control has solid state devices, which continuously monitor for presence of flame, when the system is in the heating mode of operation. Slow opening, dual solenoid combination gas valve and regulator provide extra safety and quieter operation.

QUICK HEATING— Durable, cycle tested, heavy gauge **aluminized steel heat exchanger** quickly transfers heat to provide warm conditioned air to the structure. **Low energy power vent blower,** to increase efficiency and provide discharge of gas fumes to the outside, allows common venting with hot water heater.

BURNERS - Multiport Inshot burners will give years of quiet and efficient service. All models can be converted to **L.P. gas** without changing burners.

INTEGRATED SYSTEM CONTROL - Exclusively designed operational program provides total control of furnace limit sensors, blowers, gas valve, flame control and includes self diagnostics for ease of service.

AIR DELIVERY - The multispeed, direct drive blower motor, with sufficient airflow range for most heating and cooling requirements, will switch from heating to cooling speeds on demand from room thermostat. The blower door safety switch will prevent or terminate furnace operation when the blower door is removed. (Fan relay and 35VA control transformer is standard).

STYLING - Heavy gauge steel and "wrap-around" cabinet construction is used in the cabinet with baked-on enamel finish for strength and beauty. The heat exchanger section of the cabinet is completely lined with foil faced fiberglass insulation. This results in quiet and efficient operation due to the excellent acoustical and insulating qualities of fiberglass.

FEATURES AND GENERAL OPERATION - The High Efficiency Gas Furnaces employs a Silicon Nitride Hot Surface Ignition system, which eliminates the waste of a constant burning pilot. The integrated system control lights the main burners upon a demand for heat from the room thermostat. Complete front service access.

a. Low energy power venter

b. Vent proving pressure switch.

Since the manufacturer has a policy of continuous product and product data improvement, it reserves the right to change specifications and design without notice.

Technical Literature - Printed in U.S.A.

Ingersoll Rand
11819 N. Pennsylvania Street
Carmel, IN 46032

Intertek

Library	Ameristar
Product Section	Furnaces
Product	Furnace
Model	M801
Literature Type	Submittal
Sequence	-
Date	05/15
File No.	M801P080BD45-SUB-1A
Supersedes	M801P080BD45-SUB-1

Ameristar

M801P100CD48-SUB-1A

TAG: _____

SUBMITTAL

Downflow/ Horizontal Induced Draft Single Stage Gas Furnace

M801P100CD48AA

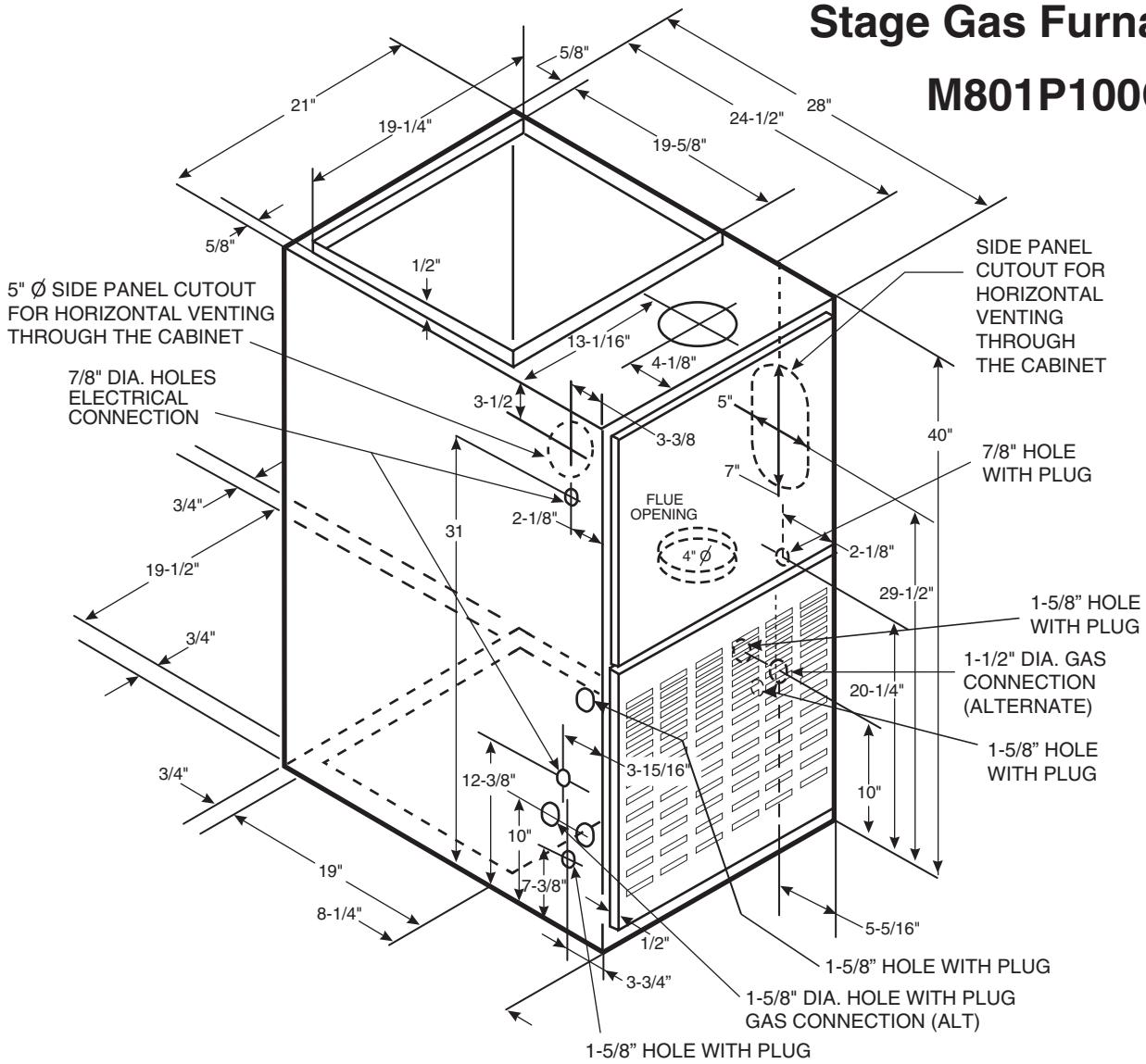

FURNACE AIRFLOW (CFM) VS. STATIC PRESSURE (ins. w.g.)										
MODEL	**SPEED TAP**	**0.10**	**0.20**	**0.30**	**0.40**	**0.50**	**0.60**	**0.70**	**0.80**	**0.90**
M801P100CD48AA	4-HIGH - Black	1965	1915	1865	1805	1740	1670	1587	1500	1370
	3-MED - HIGH - Blue	1645	1627	1605	1575	1535	1482	1421	1330	1220
	2-MED - LOW - Yellow	1407	1398	1387	1375	1347	1318	1275	1190	1095
	1-LOW - Red	1202	1208	1205	1195	1166	1140	1105	1045	970

CFM VS. TEMPERATURE RISE																	
MODEL	**CFM (CUBIC FEET PER MINUTE)**																
	800	900	1000	1100	1200	1300	1400	1500	1600	1700	1800	1900	2000	2100	2200	2300	2400
M801P100CD48AA					62	57	53	49	46	44	41	39	37				

© 2012 Ingersoll Rand

PRODUCT SPECIFICATIONS ①

MODEL	M801P100CD48AA
TYPE	Downflow / Horizontal
RATINGS ②	
Input BTUH ③	100,000
Capacity BTUH (ICS) ③	80,000
Temp. rise (Min.-Max.) °F.	35 - 65
BLOWER DRIVE	DIRECT
Diameter - Width (In.)	10 x 8
No. Used	1
Speeds (No.)	4
CFM vs. in. w.g.	See Fan Performance Table
Motor HP	1/2
R.P.M.	1075
Volts / Ph / Hz	115/1/60
COMBUSTION FAN - Type	Centrifugal
Drive - No. Speeds	Direct - 1
Motor HP - RPM	1/50 - 3180
Volts / Ph / Hz	115/1/60
FLA	1.09
FILTER — Furnished?	No
Type Recommended	High Velocity
Hi Vel. (No.-Size-Thk.)	2 - 16x20 - 1in.
VENT — Size (in.)	4 Round

HEAT EXCHANGER	
Type - Fired	Alum. Steel
- Unfired	
Gauge (Fired)	20
ORIFICES — Main	
Nat. Gas. Qty. — Drill Size	5 — 45
L.P. Gas Qty. — Drill Size	5 — 56
GAS VALVE	Redundant - Single Stage
PILOT SAFETY DEVICE	
Type	Hot Surface Ignition
BURNERS — Type	Multiport Inshot
Number	5
POWER CONN. — V / Ph / Hz ④	115/1/60
Ampacity (In Amps)	11.6
Max. Overcurrent Protection (Amps)	15
PIPE CONN. SIZE (IN.)	1/2
DIMENSIONS	H x W x D
Crated (In.)	41-3/4 x 23 x 30-1/2
WEIGHT	
Shipping (Lbs.) / Net (Lbs.)	166 / 154

① Central Furnace heating designs are certified to ANSI Z21.47 / CSA 2.3.
② For U.S. applications, above input ratings (BTUH) are up to 2,000 feet, derate 4% per 1,000 feet for elevations above 2,000 feet above sea level.
For Canadian applications, above input ratings (BTUH) are up to 4,500 feet, derate 4% per 1,000 feet for elevations above 4,500 feet above sea level.
③ Based on U.S. government standard tests.
④ The above wiring specifications are in accordance with National Electrical Code; however, installations must comply with local codes.

Mechanical Specifications

NATURAL GAS MODELS - Central Heating furnace designs are certified to ANSI Z21.47 / CSA 2.3 for both natural and L.P. gas. Limit setting and rating data were established and approved under standard rating conditions using American National Standards Institute standards.

SAFE OPERATION - The Integrated System Control has solid state devices, which continuously monitor for presence of flame, when the system is in the heating mode of operation. Slow opening, dual solenoid combination gas valve and regulator provide extra safety and quieter operation.

QUICK HEATING— Durable, cycle tested, heavy gauge **aluminized steel heat exchanger** quickly transfers heat to provide warm conditioned air to the structure. **Low energy power vent blower,** to increase efficiency and provide discharge of gas fumes to the outside, allows common venting with hot water heater.

BURNERS - Multiport Inshot burners will give years of quiet and efficient service. All models can be converted to **L.P. gas** without changing burners.

INTEGRATED SYSTEM CONTROL - Exclusively designed operational program provides total control of furnace limit sensors, blowers, gas valve, flame control and includes self diagnostics for ease of service.

AIR DELIVERY - The multispeed, direct drive blower motor, with sufficient airflow range for most heating and cooling requirements, will switch from heating to cooling speeds on demand from room thermostat. The blower door safety switch will prevent or terminate furnace operation when the blower door is removed. (Fan relay and 35VA control transformer is standard).

STYLING - Heavy gauge steel and "wrap-around" cabinet construction is used in the cabinet with baked-on enamel finish for strength and beauty. The heat exchanger section of the cabinet is completely lined with foil faced fiberglass insulation. This results in quiet and efficient operation due to the excellent acoustical and insulating qualities of fiberglass.

FEATURES AND GENERAL OPERATION - The High Efficiency Gas Furnaces employs a Silicon Nitride Hot Surface Ignition system, which eliminates the waste of a constant burning pilot. The integrated system control lights the main burners upon a demand for heat from the room thermostat. Complete front service access.

a. Low energy power venter

b. Vent proving pressure switch.

Since the manufacturer has a policy of continuous product and product data improvement, it reserves the right to change specifications and design without notice.

Technical Literature - Printed in U.S.A.

Ingersoll Rand
11819 N. Pennsylvania Street
Carmel, IN 46032

Intertek

Library	Ameristar
Product Section	Furnaces
Product	Furnace
Model	M801
Literature Type	Submittal
Sequence	-
Date	05/15
File No.	M801P100CD48-SUB-1A
Supersedes	M801P100CD48-SUB-1

Ameristar

M801P100CD60-SUB-1A

TAG: _____

SUBMITTAL

Downflow/ Horizontal Induced Draft Single Stage Gas Furnace

M801P100CD60AA

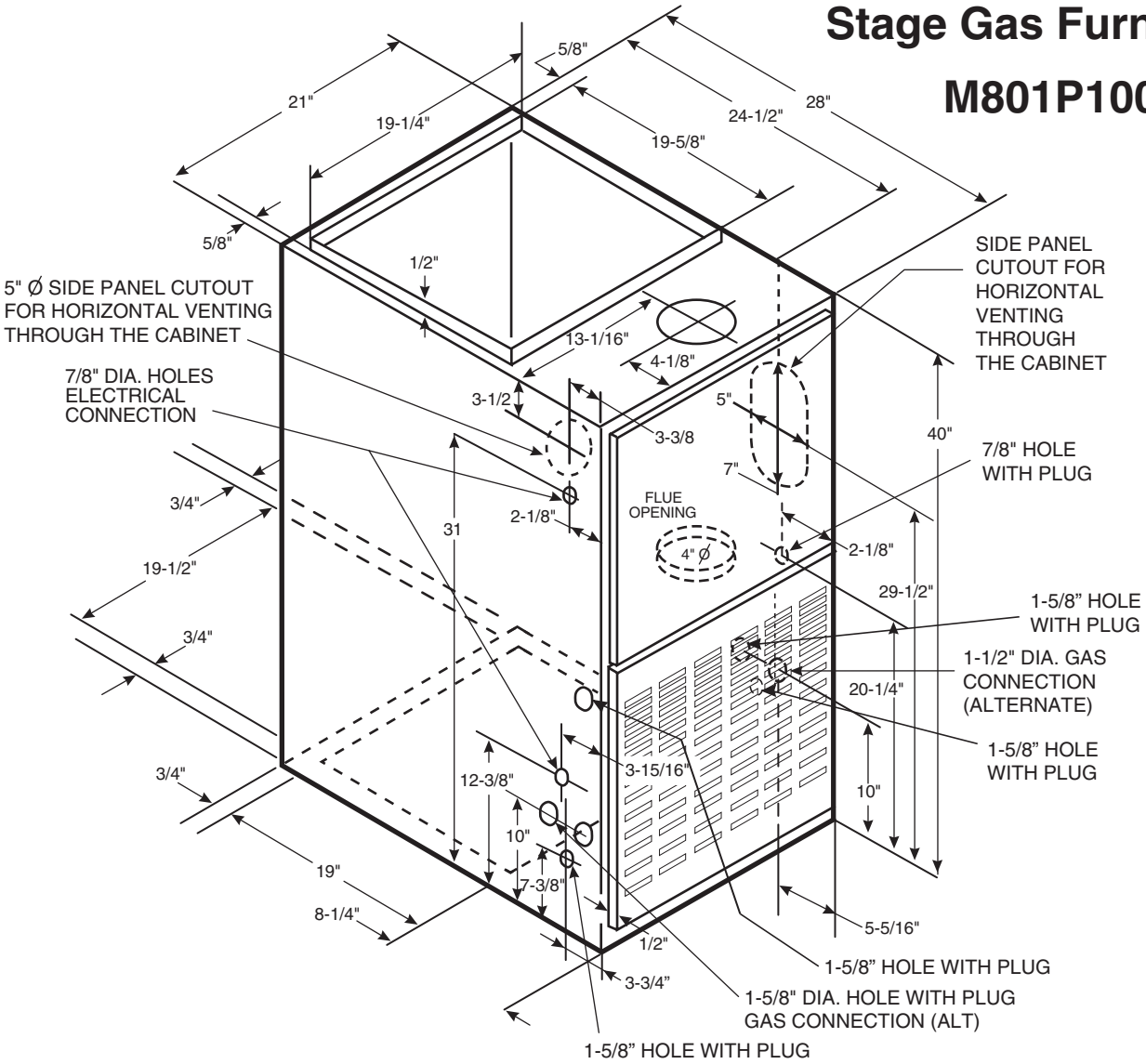

FURNACE AIRFLOW (CFM) VS. STATIC PRESSURE (ins. w.g.)										
MODEL	**SPEED TAP**	**0.10**	**0.20**	**0.30**	**0.40**	**0.50**	**0.60**	**0.70**	**0.80**	**0.90**
M801P100CD60AA	4-HIGH - Black	2165	2113	2060	1995	1929	1842	1755	1674	1593
	3-MED - HIGH - Blue	1962	1927	1891	1839	1786	1724	1662	1581	1500
	2-MED - LOW - Yellow	1705	1688	1671	1636	1600	1547	1492	1435	1377
	1-LOW - Red	1492	1467	1442	1414	1385	1346	1307	1243	1179

CFM VS. TEMPERATURE RISE															
MODEL	**CFM (CUBIC FEET PER MINUTE)**														
	1000	1100	1200	1300	1400	1500	1600	1700	1800	1900	2000	2100	2200	2300	2400
M801P100CD60AA			62	57	53	49	46	44	41	39	37	35	34	32	31

© 2012 Ingersoll Rand

PRODUCT SPECIFICATIONS ①

MODEL	M801P100CD60AA
TYPE	Downflow / Horizontal
RATINGS ②	
Input BTUH ③	100,000
Capacity BTUH (ICS) ③	80,000
Temp. rise (Min.-Max.) °F.	30 - 60
BLOWER DRIVE	DIRECT
Diameter - Width (In.)	11 x 10
No. Used	1
Speeds (No.)	4
CFM vs. in. w.g.	See Fan Performance Table
Motor HP	1/2
R.P.M.	1075
Volts / Ph / Hz	115/1/60
COMBUSTION FAN - Type	Centrifugal
Drive - No. Speeds	Direct - 1
Motor HP - RPM	1/50 - 3180
Volts / Ph / Hz	115/1/60
FLA	1.09
FILTER — Furnished?	No
Type Recommended	High Velocity
Hi Vel. (No.-Size-Thk.)	2 - 16x20 - 1 in.
VENT — Size (in.)	4 Round

HEAT EXCHANGER	
Type - Fired	Alum. Steel - Type I
- Unfired	
Gauge (Fired)	20
ORIFICES — Main	
Nat. Gas. Qty. — Drill Size	5 — 45
L.P. Gas Qty. — Drill Size	5 — 56
GAS VALVE	Redundant - Single Stage
PILOT SAFETY DEVICE	
Type	Hot Surface Ignition
BURNERS — Type	Multiport Inshot
Number	5
POWER CONN. — V / Ph / Hz ④	115/1/60
Ampacity (In Amps)	12.8
Max. Overcurrent Protection (Amps)	15
PIPE CONN. SIZE (IN.)	1/2
DIMENSIONS	H x W x D
Crated (In.)	41-3/4 x 23 x 30-1/2
WEIGHT	
Shipping (Lbs.) / Net (Lbs.)	167 / 155

① Central Furnace heating designs are certified to ANSI Z21.47 / CSA 2.3.
② For U.S. applications, above input ratings (BTUH) are up to 2,000 feet, derate 4% per 1,000 feet for elevations above 2,000 feet above sea level.
For Canadian applications, above input ratings (BTUH) are up to 4,500 feet, derate 4% per 1,000 feet for elevations above 4,500 feet above sea level.
③ Based on U.S. government standard tests.
④ The above wiring specifications are in accordance with National Electrical Code; however, installations must comply with local codes.

Mechanical Specifications

NATURAL GAS MODELS - Central Heating furnace designs are certified to ANSI Z21.47 / CSA 2.3 for both natural and L.P. gas. Limit setting and rating data were established and approved under standard rating conditions using American National Standards Institute standards.

SAFE OPERATION - The Integrated System Control has solid state devices, which continuously monitor for presence of flame, when the system is in the heating mode of operation. Slow opening, dual solenoid combination gas valve and regulator provide extra safety and quieter operation.

QUICK HEATING— Durable, cycle tested, heavy gauge **aluminized steel heat exchanger** quickly transfers heat to provide warm conditioned air to the structure. **Low energy power vent blower,** to increase efficiency and provide discharge of gas fumes to the outside, allows common venting with hot water heater.

BURNERS - Multiport Inshot burners will give years of quiet and efficient service. All models can be converted to **L.P. gas** without changing burners.

INTEGRATED SYSTEM CONTROL - Exclusively designed operational program provides total control of furnace limit sensors, blowers, gas valve, flame control and includes self diagnostics for ease of service.

AIR DELIVERY - The multispeed, direct drive blower motor, with sufficient airflow range for most heating and cooling requirements, will switch from heating to cooling speeds on demand from room thermostat. The blower door safety switch will prevent or terminate furnace operation when the blower door is removed. (Fan relay and 35VA control transformer is standard).

STYLING - Heavy gauge steel and "wrap-around" cabinet construction is used in the cabinet with baked-on enamel finish for strength and beauty. The heat exchanger section of the cabinet is completely lined with foil faced fiberglass insulation. This results in quiet and efficient operation due to the excellent acoustical and insulating qualities of fiberglass.

FEATURES AND GENERAL OPERATION - The High Efficiency Gas Furnaces employs a Silicon Nitride Hot Surface Ignition system, which eliminates the waste of a constant burning pilot. The integrated system control lights the main burners upon a demand for heat from the room thermostat. Complete front service access.

a. Low energy power venter

b. Vent proving pressure switch.

Since the manufacturer has a policy of continuous product and product data improvement, it reserves the right to change specifications and design without notice.

Technical Literature - Printed in U.S.A.

Ingersoll Rand
11819 N. Pennsylvania Street
Carmel, IN 46032

Intertek

Library	Ameristar
Product Section	Furnaces
Product	Furnace
Model	M801
Literature Type	Submittal
Sequence	-
Date	05/15
File No.	M801P100CD60-SUB-1A
Supersedes	M801P100CD60-SUB-1

Ameristar

M801P120DD60-SUB-1A

TAG: _____

SUBMITTAL

Downflow/ Horizontal Induced Draft Single Stage Gas Furnace

M801P120DD60AA

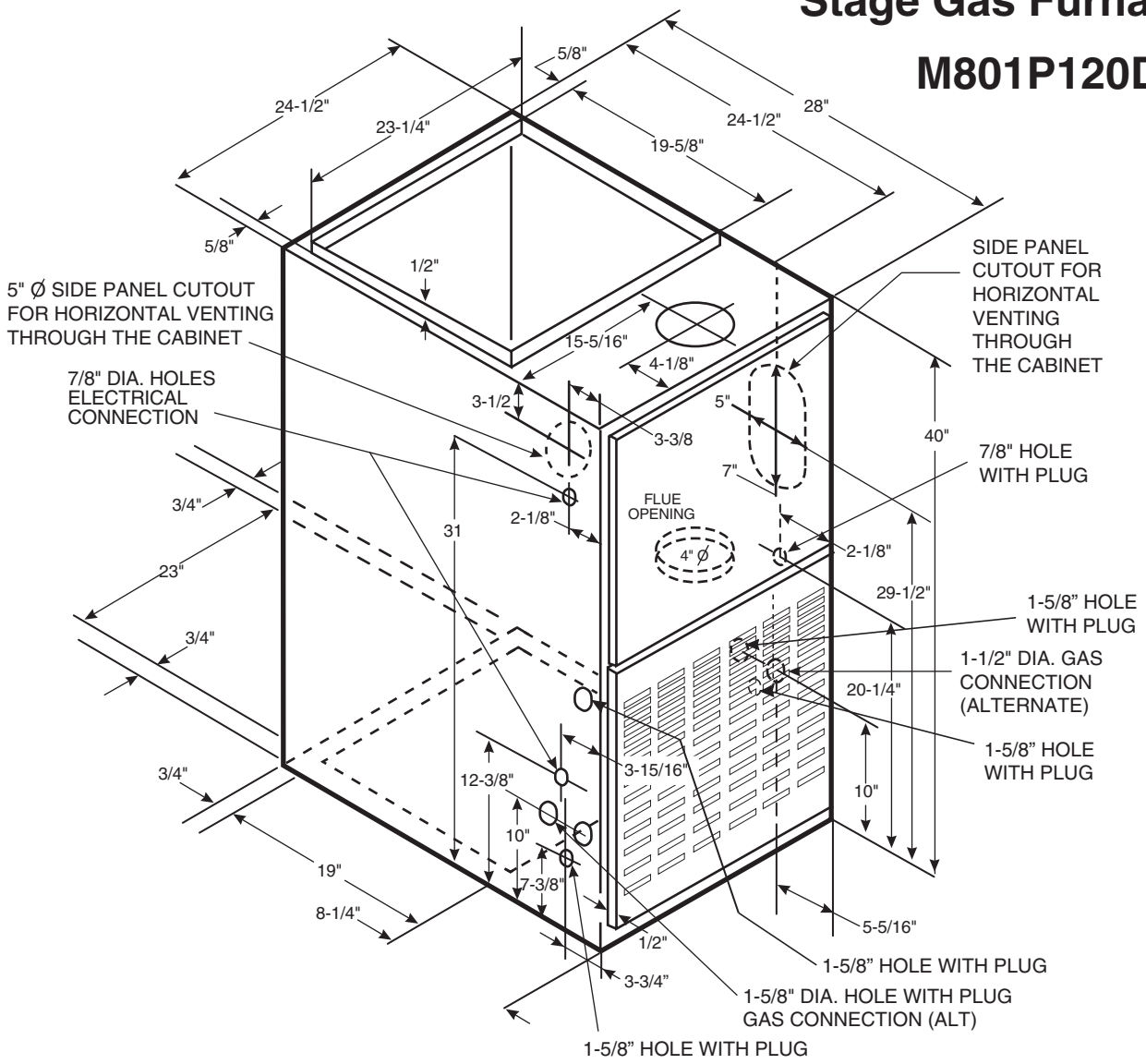

FURNACE AIRFLOW (CFM) VS. STATIC PRESSURE (ins. w.g.)										
MODEL	**SPEED TAP**	**0.10**	**0.20**	**0.30**	**0.40**	**0.50**	**0.60**	**0.70**	**0.80**	**0.90**
M801P120DD60AA	4-HIGH - Black	2241	2202	2163	2106	2049	1979	1908	1804	1700
	3-MED - HIGH - Blue	1981	1962	1942	1904	1866	1805	1743	1680	1617
	2-MED - LOW - Yellow	1721	1705	1688	1671	1653	1611	1569	1515	1461
	1-LOW - Red	1476	1466	1456	1440	1423	1392	1361	1302	1243

CFM VS. TEMPERATURE RISE															
MODEL	**CFM (CUBIC FEET PER MINUTE)**														
	1000	1100	1200	1300	1400	1500	1600	1700	1800	1900	2000	2100	2200	2300	2400
M801P120DD60AA						59	56	52	49	47	44	42	40		

© 2012 Ingersoll Rand

PRODUCT SPECIFICATIONS ①

MODEL	M801P120DD60AA
TYPE	Downflow / Horizontal
RATINGS ②	
Input BTUH ③	120,000
Capacity BTUH (ICS) ③	96,000
Temp. rise (Min.-Max.) °F.	35 - 65
BLOWER DRIVE	DIRECT
Diameter - Width (In.)	11 x 10
No. Used	1
Speeds (No.)	4
CFM vs. in. w.g.	See Fan Performance Table
Motor HP	1/2
R.P.M.	1075
Volts / Ph / Hz	115/1/60
COMBUSTION FAN - Type	Centrifugal
Drive - No. Speeds	Direct - 1
Motor HP - RPM	1/50 - 3180
Volts / Ph / Hz	115/1/60
FLA	1.09
FILTER — Furnished?	No
Type Recommended	High Velocity
Hi Vel. (No.-Size-Thk.)	2 - 16x20 - 1 in.
VENT — Size (in.)	4 Round

HEAT EXCHANGER	
Type - Fired	Alum. Steel - Type I
- Unfired	
Gauge (Fired)	20
ORIFICES — Main	
Nat. Gas. Qty. — Drill Size	6 — 45
L.P. Gas Qty. — Drill Size	6 — 56
GAS VALVE	Redundant - Single Stage
PILOT SAFETY DEVICE	
Type	Hot Surface Ignition
BURNERS — Type	Multiport Inshot
Number	6
POWER CONN. — V / Ph / Hz ④	115/1/60
Ampacity (In Amps)	12.8
Max. Overcurrent Protection (Amps)	15
PIPE CONN. SIZE (IN.)	1/2
DIMENSIONS	H x W x D
Crated (In.)	41-3/4 x 26-1/2 x 30-1/2
WEIGHT	
Shipping (Lbs.) / Net (Lbs.)	189 / 176

① Central Furnace heating designs are certified to ANSI Z21.47 / CSA 2.3.
② For U.S. applications, above input ratings (BTUH) are up to 2,000 feet, derate 4% per 1,000 feet for elevations above 2,000 feet above sea level.
For Canadian applications, above input ratings (BTUH) are up to 4,500 feet, derate 4% per 1,000 feet for elevations above 4,500 feet above sea level.
③ Based on U.S. government standard tests.
④ The above wiring specifications are in accordance with National Electrical Code; however, installations must comply with local codes.

Mechanical Specifications

NATURAL GAS MODELS - Central Heating furnace designs are certified to ANSI Z21.47 / CSA 2.3 for both natural and L.P. gas. Limit setting and rating data were established and approved under standard rating conditions using American National Standards Institute standards.

SAFE OPERATION - The Integrated System Control has solid state devices, which continuously monitor for presence of flame, when the system is in the heating mode of operation. Slow opening, dual solenoid combination gas valve and regulator provide extra safety and quieter operation.

QUICK HEATING— Durable, cycle tested, heavy gauge **aluminized steel heat exchanger** quickly transfers heat to provide warm conditioned air to the structure. **Low energy power vent blower,** to increase efficiency and provide discharge of gas fumes to the outside, allows common venting with hot water heater.

BURNERS - Multiport Inshot burners will give years of quiet and efficient service. All models can be converted to **L.P. gas** without changing burners.

INTEGRATED SYSTEM CONTROL - Exclusively designed operational program provides total control of furnace limit sensors, blowers, gas valve, flame control and includes self diagnostics for ease of service.

AIR DELIVERY - The multispeed, direct drive blower motor, with sufficient airflow range for most heating and cooling requirements, will switch from heating to cooling speeds on demand from room thermostat. The blower door safety switch will prevent or terminate furnace operation when the blower door is removed. (Fan relay and 35VA control transformer is standard).

STYLING - Heavy gauge steel and "wrap-around" cabinet construction is used in the cabinet with baked-on enamel finish for strength and beauty. The heat exchanger section of the cabinet is completely lined with foil faced fiberglass insulation. This results in quiet and efficient operation due to the excellent acoustical and insulating qualities of fiberglass.

FEATURES AND GENERAL OPERATION - The High Efficiency Gas Furnaces employs a Silicon Nitride Hot Surface Ignition system, which eliminates the waste of a constant burning pilot. The integrated system control lights the main burners upon a demand for heat from the room thermostat. Complete front service access.

a. Low energy power venter

b. Vent proving pressure switch.

Since the manufacturer has a policy of continuous product and product data improvement, it reserves the right to change specifications and design without notice.

Technical Literature - Printed in U.S.A.

Ingersoll Rand
11819 N. Pennsylvania Street
Carmel, IN 46032

Intertek

Library	Ameristar
Product Section	Furnaces
Product	Furnace
Model	M801
Literature Type	Submittal
Sequence	-
Date	05/15
File No.	M801P120DD60-SUB-1A
Supersedes	M801P120DD60-SUB-1

Ameristar

M801P140DD60-SUB-1A

TAG: _____

SUBMITTAL

Downflow/ Horizontal Induced Draft Single Stage Gas Furnace

M801P140DD60AA

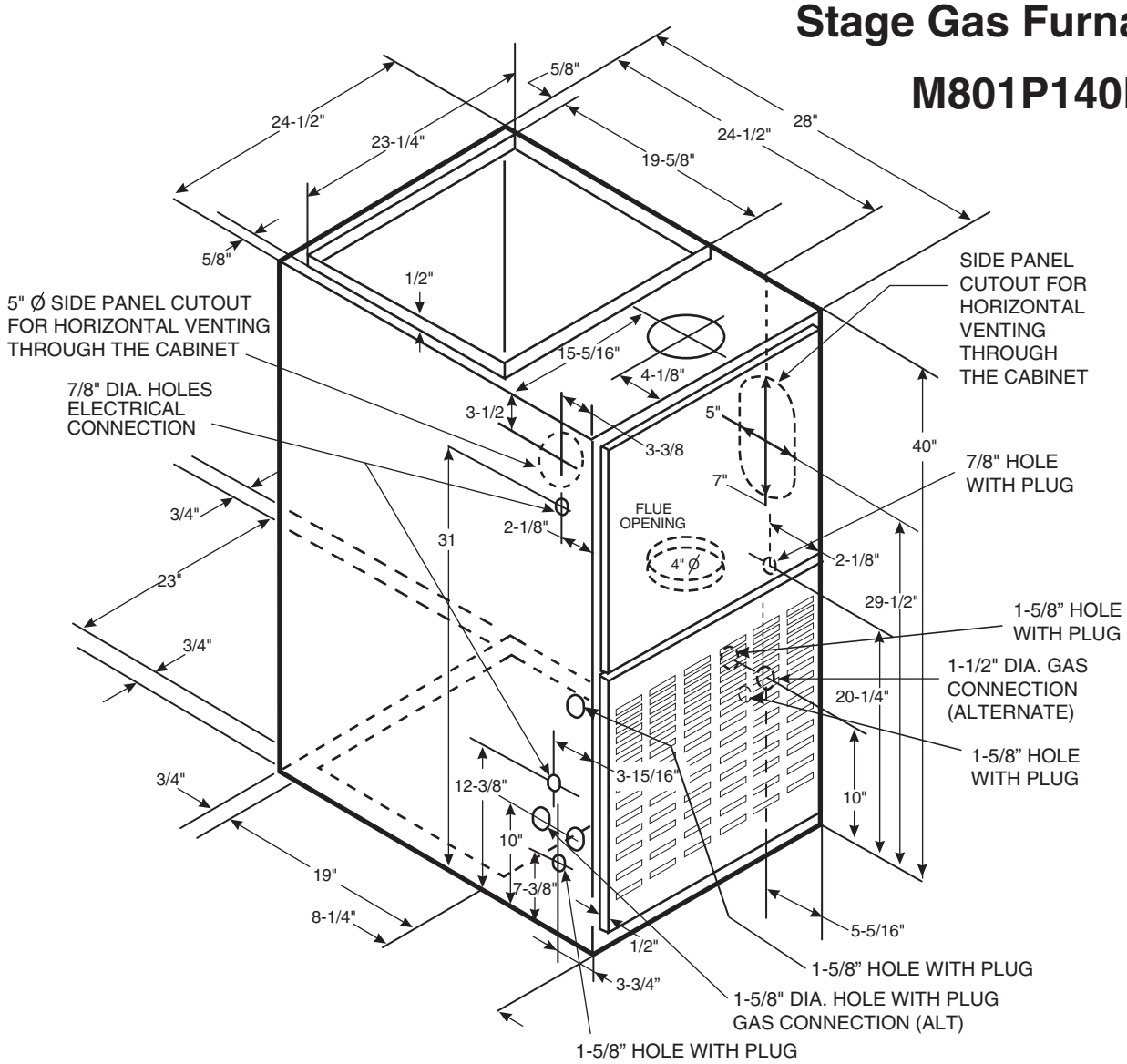

FURNACE AIRFLOW (CFM) VS. STATIC PRESSURE (ins. w.g.)										
MODEL	**SPEED TAP**	**0.10**	**0.20**	**0.30**	**0.40**	**0.50**	**0.60**	**0.70**	**0.80**	**0.90**
M801P140DD60AA	4-HIGH - Black	2377	2321	2265	2199	2133	2050	1967	1877	1786
	3-MED - HIGH - Blue	2115	2081	2046	1992	1938	1872	1805	1727	1649
	2-MED - LOW - Yellow	1806	1793	1779	1738	1696	1655	1614	1556	1497
	1-LOW - Red	1527	1507	1486	1473	1459	1422	1384	1329	1273

CFM VS. TEMPERATURE RISE														
MODEL	**CFM (CUBIC FEET PER MINUTE)**													
	1100	1200	1300	1400	1500	1600	1700	1800	1900	2000	2100	2200	2300	2400
M801P140DD60AA					69	65	61	58	55	52	49	47	45	

© 2012 Ingersoll Rand

PRODUCT SPECIFICATIONS ①

MODEL	M801P140DD60AA
TYPE	Downflow / Horizontal
RATINGS ②	
Input BTUH ③	140,000
Capacity BTUH (ICS) ③	113,000
Temp. rise (Min.-Max.) °F.	45 - 75
BLOWER DRIVE	DIRECT
Diameter - Width (In.)	11 x 10
No. Used	1
Speeds (No.)	4
CFM vs. in. w.g.	See Fan Performance Table
Motor HP	3/4
R.P.M.	1075
Volts / Ph / Hz	115/1/60
COMBUSTION FAN - Type	Centrifugal
Drive - No. Speeds	Direct - 1
Motor HP - RPM	1/50 - 3180
Volts / Ph / Hz	115/1/60
FLA	1.09
FILTER — Furnished?	No
Type Recommended	High Velocity
Hi Vel. (No.-Size-Thk.)	2 - 16x20 - 1in.
VENT — Size (in.)	4 Round

HEAT EXCHANGER	
Type - Fired	Alum. Steel
- Unfired	
Gauge (Fired)	20
ORIFICES — Main	
Nat. Gas. Qty. — Drill Size	7 — 45
L.P. Gas Qty. — Drill Size	7 — 56
GAS VALVE	Redundant - Single Stage
PILOT SAFETY DEVICE	
Type	Hot Surface Ignition
BURNERS — Type	Multiport Inshot
Number	7
POWER CONN. — V / Ph / Hz ④	115/1/60
Ampacity (In Amps)	13.8
Max. Overcurrent Protection (Amps)	20
PIPE CONN. SIZE (IN.)	1/2
DIMENSIONS	H x W x D
Crated (In.)	41-3/4 x 26-1/2 x 30-1/2
WEIGHT	
Shipping (Lbs.) / Net (Lbs.)	196 / 183

① Central Furnace heating designs are certified to ANSI Z21.47 / CSA 2.3.
② For U.S. applications, above input ratings (BTUH) are up to 2,000 feet, derate 4% per 1,000 feet for elevations above 2,000 feet above sea level.
For Canadian applications, above input ratings (BTUH) are up to 4,500 feet, derate 4% per 1,000 feet for elevations above 4,500 feet above sea level.
③ Based on U.S. government standard tests.
④ The above wiring specifications are in accordance with National Electrical Code; however, installations must comply with local codes.

Mechanical Specifications

NATURAL GAS MODELS - Central Heating furnace designs are certified to ANSI Z21.47 / CSA 2.3 for both natural and L.P. gas. Limit setting and rating data were established and approved under standard rating conditions using American National Standards Institute standards.

SAFE OPERATION - The Integrated System Control has solid state devices, which continuously monitor for presence of flame, when the system is in the heating mode of operation. Slow opening, dual solenoid combination gas valve and regulator provide extra safety and quieter operation.

QUICK HEATING— Durable, cycle tested, heavy gauge **aluminized steel heat exchanger** quickly transfers heat to provide warm conditioned air to the structure. **Low energy power vent blower,** to increase efficiency and provide discharge of gas fumes to the outside, allows common venting with hot water heater.

BURNERS - Multiport Inshot burners will give years of quiet and efficient service. All models can be converted to **L.P. gas** without changing burners.

INTEGRATED SYSTEM CONTROL - Exclusively designed operational program provides total control of furnace limit sensors, blowers, gas valve, flame control and includes self diagnostics for ease of service.

AIR DELIVERY - The multispeed, direct drive blower motor, with sufficient airflow range for most heating and cooling requirements, will switch from heating to cooling speeds on demand from room thermostat. The blower door safety switch will prevent or terminate furnace operation when the blower door is removed. (Fan relay and 35VA control transformer is standard).

STYLING - Heavy gauge steel and "wrap-around" cabinet construction is used in the cabinet with baked-on enamel finish for strength and beauty. The heat exchanger section of the cabinet is completely lined with foil faced fiberglass insulation. This results in quiet and efficient operation due to the excellent acoustical and insulating qualities of fiberglass.

FEATURES AND GENERAL OPERATION - The High Efficiency Gas Furnaces employs a Silicon Nitride Hot Surface Ignition system, which eliminates the waste of a constant burning pilot. The integrated system control lights the main burners upon a demand for heat from the room thermostat. Complete front service access.

a. Low energy power venter

b. Vent proving pressure switch.

Since the manufacturer has a policy of continuous product and product data improvement, it reserves the right to change specifications and design without notice.

Technical Literature - Printed in U.S.A.

Ingersoll Rand
11819 N. Pennsylvania Street
Carmel, IN 46032

Intertek

Library	Ameristar
Product Section	Furnaces
Product	Furnace
Model	M801
Literature Type	Submittal
Sequence	-
Date	05/15
File No.	M801P140DD60-SUB-1A
Supersedes	M801P140DD60-SUB-1